NEWPORT-MESA UNIFIED SCHOOL DISTRICT

Motorola Solutions-Avigilon RFI Response
Install & Integration of a District Wide Integrated Security System

November 17, 2022

Submitted By:

Ryan Ta

Business Development Manager- Education

(619) 519-6618

ryan.ta@motorolasolutions.com

***Motorola Solutions* - Avigilon**

1717 McKinney Ave, Suite 1590

Dallas, TX 75202

+1 (888) 281-5182

October 13, 2022

Jonathan Geiszler
Director of Purchasing & Warehouse
2985 Bear St. Bldg. A
Costa Mesa, CA, 92626

RE: RFI #104-23 Integrated Security System Standard

Dear Mr. Geiszler

Motorola Solutions, Inc- Avigilon is proposing to enhance campus safety and prepare Newport Mesa Unified to respond to emergencies with our Safety Reimagined end-to-end solution. Tailored to Newport Mesa Unified's priorities, Safety Reimagined includes products to detect threats, analyze available information, communicate with staff, and coordinate emergency responses.

Motorola Solutions' proposal is conditional upon Newport Mesa Unified's acceptance of the terms and conditions contained in the Communications System and Services Agreement (CSSA) included in this proposal, or a negotiated version thereof. Pricing will remain valid for 90 days from the date of this proposal.

Any questions Newport Mesa Unified has regarding this proposal can be directed to Ryan Ta, Business Development Manager-Education, at (619) 519-6618 or ryan.ta@motorolasolutions.com

Our goal is to provide Newport Mesa Unified with the best products and services available to support school safety. We thank you for the opportunity to present our proposed solution. We hope to strengthen our relationship by implementing this project.

Sincerely,

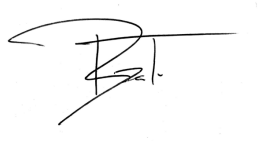

Ryan Ta
Business Development Manager- Education

MOTOROLA SOLUTIONS, INC.

Table of Contents

3.Executive Summary

4.Motorola-Avigilon Solution Narrative

Detect
Analyze
Communicate
Respond
Cloud Adoption
Basic Cost Structure
Support

5. System Diagram

6. System Requirements

7. Cyber Security Program

8. Itemized Pricing Proposal

9. Product Data

10. Certified Integrators

11. RFP Questions

1.02 Proposed System Solution
1.03 Software and License Pricing
1.04 Integrators
1.05 Support to the District
1.06 Video System Integration
1.07 Video Analytics
1.08 Intrusion Detection Integration

12. Similar Deployment

14. Supplemental data as desired by the Respondent to supplement the RFP response.

3.Executive Summary

High-resolution cameras with edge-based intelligence, A.I.-powered video analytics, facility access control, and improved radio technology can be powerful tools for keeping schools safe. But if all of those tools are designed to operate alone, they will only create a bigger influx of data – in need of a coordinated solution to make it practically useful.

With the industry's largest R&D investment and an aggressive strategy of acquisitions and partnerships, Motorola Solutions has developed an integrated portfolio of applications, devices, and services to provide vital operational intelligence for campus protection – channeling a flood of emergency data into a steady stream of safety information. All of this while maintaining an open platform for ultimate flexibility.

These tools cover a wider area with better technology - enabling you to detect threats accurately, analyze data quickly, communicate information easily, and respond to incidents decisively.

In February of 2018, Motorola continued to build its portfolio by acquiring Avigilon, a leader in Video Security and Access Control. Avigilon designs, develops, and manufactures solutions in video analytics, cloud, security cameras, video management software, video management hardware, and access control solutions. Avigilon is an industry leader and, together with Motorola Solutions, provides integrated solutions for video security, access control, and critical communications. With a complete end-to-end solution including, cameras, analytics, and access control, school districts are able to better manage and respond to every day events and critical situations.

In March of 2022, Motorola added to its growing portfolio and acquired Ava Security, a leader in cloud based video security solutions. Historically, districts wanting to move to a cloud based video solution, had to completely rip and replace their existing systems as those systems were proprietary. Ava's open, ONVIF-compliant architecture allows districts to use their existing cameras (and add analytics to those cameras) while allowing districts to transition to the cloud.

Through the use of Motorola's portfolio of video security and access control solutions, Newport Mesa Unified will be able to utilize existing hardware while adding a complete unified solution for their video security and access control. Should the district desire to move towards a cloud option in the future, Motorola's portfolio allows for a seamless transition.

b. The Respondent's strategy to provide direct training, certification, and support to the District's staff necessary to maintain the system.

Training and support are critical to the success of any solution. Motorola offers free online training videos and certifications for all end users. Avigilon believes that support and training are a vital part of the security of a campus. Therefore, not only will our certified security integrator be able to provide support, Avigilon will provide unlimited support before, during and after installations to both the integrator and to Newport Mesa Unified. 24/7/365 Technical Support is also provided to NMUSD directly and to the integrator from Avigilon if needed or warranted. Unique to the industry, no certifications or Software Maintenance Agreements (SMAs) are required to access Technical Support. The local Avigilon team is also available to NMUSD at no charge to provide support.

Support can be obtained via several methods, depending on preference:

By phone 1-888-281-5182, All international numbers available at http://avigilon.com/contact-us

Online form http://avigilon.com/contact-us/
Email: response within 4-12 hours

Self-service through the Avigilon Resource Center (online partner portal)
Chat support: Available via Avigilon's website: http://avigilon.com/contact-us/

c. The Respondent's ability to provide products and services to the District including the manufacturer's responsibilities and the integrator/partner responsibilities.

As the manufacturer, Motorola Solutions will work to ensure that the district will deploy and maintain a successful, integrated security system. Motorola Solutions will assist in designs for NMUSD, ensuring that the district has all of the best possible hardware and software to fit their security needs. With over 200 integrators in Southern CA (multiple in Orange County), Motorola can also assist the district in selecting and managing the integrator or multiple integrators that best fits NMUSD's needs.

Motorola Solutions realizes that maintaining an integrated solution and ongoing support are critical to the success of the system. This is why technical support is offered at no additional charge for the Newport Mesa Unified and/or the integrator. Online training and certifications are available for all users, in addition to utilizing the local team as a resource. Technical support is offered via online/phone 24/7/365 without any Software Maintenance Agreements. As the manufacturer, Motorola Solutions will assist the integrator and the district in providing the correct bill of materials and placing orders.

Motorola Solutions maintains a great relationship with local integrators in Orange County. The integrators will be responsible for the installation & maintenance of the integrated security system. Along with the Motorola Solutions team, the integrator will assist in the design and quoting for the hardware, software and licenses for Newport Mesa USD. Additionally, the integrator may assist in the ongoing maintenance of the system which would include but not limited to troubleshooting, additional training, and system upkeep. Through the use of Motorola Solutions and their certified integrators, Newport Mesa USD will be able to deploy and maintain a successful integrated security system.

4.Motorola-Avigilon Solution Narrative

Motorola- Avigilon understands Newport-Mesa Unified School District's need to consolidate and integrate access control, alarm monitoring and security video surveillance systems for the District. Through Motorola Solution's Safety Reimagined Solution, Newport-Mesa Unified will be able to unify their security systems into one ecosystem. Motorola realizes that NMUSD requires a mature system that is scalable, open and fully integrated.

To help meet these challenges, Motorola-Avigilon Solutions is pleased to present this proposal for a next-generation School safety solution. As the industry leader in public safety communications, technology, and software, responsible for many Safe Schools solutions in California, including **Irvine Unified, Tustin, Fullerton Elementary** and thousands of other school districts across the US, Motorola Solutions is ideally suited to meet Newport-Mesa Unified's safety requirements.

Our solution design uses high-resolution (ONVIF compliant) cameras, leading-edge mobile communications technology, and next-generation dispatch consoles, along with self-learning video analytics and artificial intelligence to help you detect threats more accurately, analyze data more effectively, communicate more efficiently, and respond to incidents more decisively. By adopting Motorola-Avigilon Solutions' proposal, Newport-Mesa Unified will accomplish its stated goals of increased safety and security, while upgrading current infrastructure and equipment to prepare for future needs through a fully integrated end-to-end system (video, analytics, access control).

The following pages provide a detailed description of the tools and applications that Motorola Solutions is proposing. To aid in understanding how these tools work together, the description has been organized under four strategic headings:

- Detect
- Analyze
- Communicate
- Respond

Each category provides a different kind of support, with tools that will give you better situational awareness, more insight into the data that is available, high-performance on-campus communication, and better responses to incidents.

Detect

A school campus is a difficult place to keep safe. Threats can arise anywhere; but with limited resources and limited personnel, there's no way for school districts to cover everything all of the time. Giving students and faculty the protection that they need requires detection tools that can flag events for further investigation. With the right technology in place, personnel can see what's happening and act decisively to protect your community.

Video security – Monitor for significant events site-wide.
License plate recognition – Detect unwanted visitors before they can enter.
Watch list alerting – Find and track known threats on campus.
Access control – Manage access to an area, blocking unauthorized persons from proceeding through entry points.
Contact tracing – For access controlled areas, trace contacts with exposed students, teachers, and staff to quickly and effectively mitigate risk and curb the spread of infection.
Face mask detection – Proactive, real-time monitoring for face mask use. Advanced, video-based detection technology can detect objects, classify them as human, and scan for protective face coverings. Policy violations trigger automated alerts.
Radio Connectivity - Send video, access control, and sensor alerts from Avigilon Control Center (ACC)™ software to your compatible MOTOTRBO™ radios. Eliminate the need for staffing a video wall, and keep your security officers in the field.

Our solution can bring together the different facets of detection -the community, on-site cameras, and intelligent detection software-to keep your campuses, staff, and students safe.

Video Security

Video Security
One interface for viewing live video from across facilities. Records events for later reference. Intuitive, analytical interface. Recognition, watch list, and analytical capabilities to detect threats early Access Control integration for a single view of all security solutions

Strategically deployed, high definition video cameras (up to 61 megapixels) and easy-to-operate software provide insight into who is on campus, where they have been, and where they are headed. This puts your team one step ahead of developing threats by directing attention where it belongs.

Avigilon cameras and software record and store video across facilities, using artificial intelligence to direct focus onto potential threats and abnormal events. The proposed video security system will increase situational awareness without creating excess data.

Staff will be able to view live video and review archived footage in a single video management application: Avigilon Control Center (ACC)™. The ACC software is easy to navigate and understand, and offers an additional native user interface called Focus of Attention (FoA). FoA uses color coding and markers to direct Newport-Mesa Unified users' attention to urgent alerts and key sections of recorded video. Staff will no longer need to stare at multiple camera screens but rather be given notifications as analytic events are occurring.

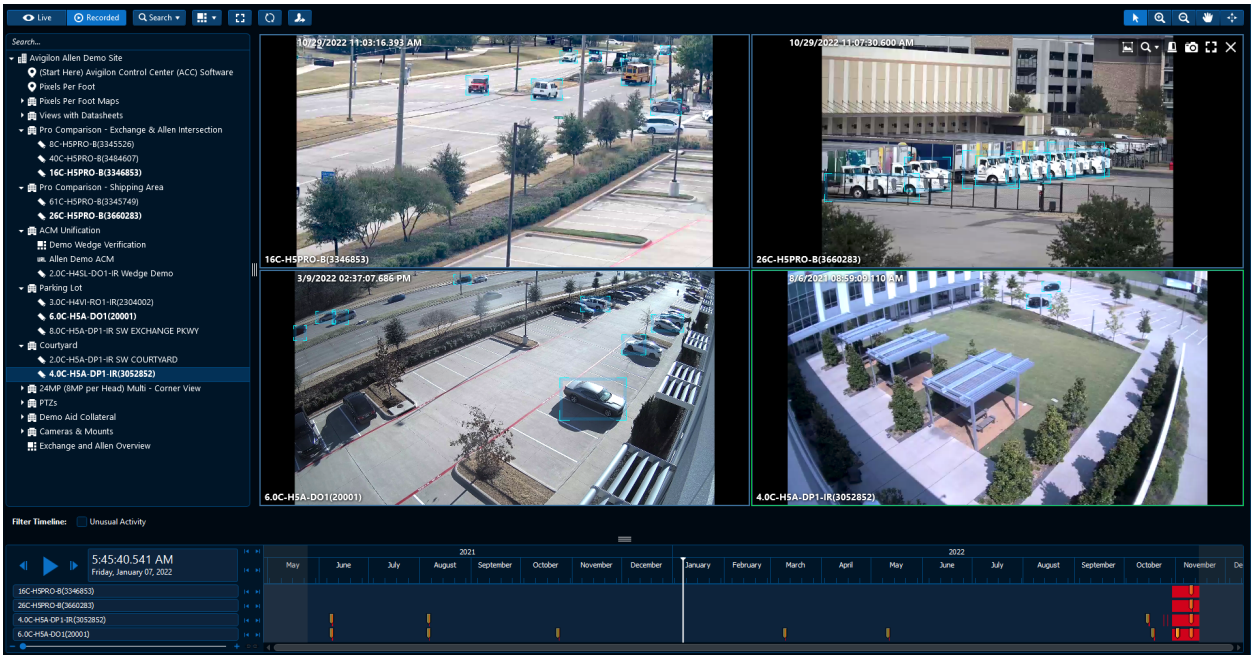

Avigilon Control Center with classified objects (vehicles) identified*

FoA organizes cameras into site honeycombs, with nodes for each camera that indicate the status of a scene. Statuses include camera online/offline, motion detected, analytic event detected, face match event, license plate match event, and alarms pertaining to analytic rules or access control events. Staff can hover over a node or click through to view live video from that camera. When an alarm is generated in FoA, it pushes the video feed to the left hand side of the screen, allowing the operator to view the incident and determine proper response. ACC software archives recorded video with timelines, using time markers to indicate video relevant to the user.

The proposed cameras, chosen to address Newport-Mesa Unified's needs, include key video quality and hardware specifications. For situations that call for a high megapixel camera, Avigilon's patented High Definition Stream Management (HDSM)™ technology reduces the bandwidth and

storage needed, making efficient use of network resources. Newport Mesa will be able to stream quality, high-definition video (even in low light areas) without a huge impact to the network.

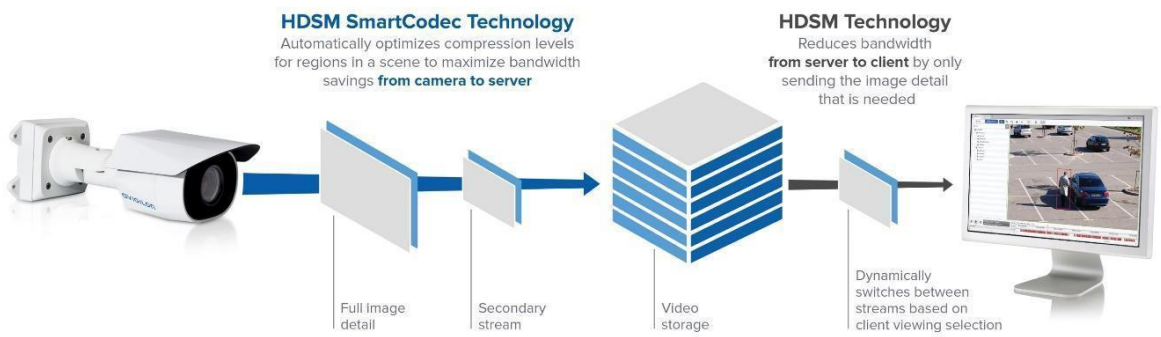

Mobile Application

Mobile connectivity is provided for Android and iOs smart phones/devices (iPads, iPhones) and from any browser running on any O/S (Mac, Windows) via ACS (Avigilon Cloud Services) module at no additional cost. The ACC Mobile app is available from Play Store and App Store at no cost. Users can view the system, multiple cameras, saved views, live and recorded video. Avigilon allows users to receive alerts and talk down live to a site from the mobile phone devices. There are no mobile or browser connection license fees or software charges. Updates can be pushed through ACS from a single site.

Access Control Manager

Access Control Manager

Enforces badge or biometric-based access to facilities.
Represents events on facility maps, contextualizing alerts.
Integrates with ACC, linking live or recorded video to access events.
Temporary facility access
500,000 simultaneous users

As part of the fully integrated system, Avigilon's Access Control Manager (ACM) is integrated into Avigilon Control Center (ACC). With the ability to have 500,000 simultaneous users, 100% browser-based, requires no client software installation, and is fully integrated with Avigilon Control Center (ACC) video management software. Together, it delivers a ready-to-deploy, high-performance solution to secure your site.

With an Avigilon Access Control Manager (ACM)™ system and access control devices, staff will be able to detect and prevent unauthorized or suspicious visitors from accessing restricted areas. ACM uses badge and biometric readers to match individuals with the permissions database and determine what areas they have access to. Temporary, timed access settings enable staff to issue access badges to visitors or restrict access to a badge that has been lost or stolen.

UNIFIED ACCESS CONTROL & VIDEO
Review and verify automated alarms generated by ACM with the associated live or recorded video in ACC™ for quicker responses.

OPEN-FIELD HARDWARE SUPPORT
Future-proof your facility with open-platform hardware from leading manufacturers, including readers, wireless locks, controllers & sub-panels, power supplies & enclosures and more.

IDENTITY MANAGEMENT
Assign and manage role-based identities and display user ID profile pictures with access control events and alarms. Print employee and visitor badges and issue mobile credentials directly from within ACM.

ALARM MANAGEMENT
Prioritize alarms with audible alerts and colored indicators. View associated video, enter notes and acknowledge and clear alarms in one place.

FLEXIBLE INTEGRATIONS
The RESTful API enables ACM to integrate with a vast range of devices and solutions to uniquely fit your needs and provide you with an end-to-end security solution.

MOBILE-ENABLED SOLUTION
Lock and unlock doors, view their real-time status and issue global actions with a simple tap with ACM Expedite mobile app. Extend access control to doorless locations with ACM Verify virtual stations.

REPLICATION & HOT STANDBY AUTO FAILOVER
Streamline identity management by replicating data on multiple ACM appliances across sites. Maximize system uptime with hot standby-auto failover to maintain multiple layers of redundancy and resiliency.

MAPS
View and manage all security objects, including identity, doors and alarms.

Access control settings are mapped to Newport-Mesa Unified facilities in ACM, visually representing access points and records. From the map, staff can control doors, monitor access solution hardware status, and check who has accessed an area. ACM links any reported events or alarms to the map. Mapping places events in context and makes it easy to access details.

ACM supports field hardware produced by Mercury Security which has the largest installed base of any OEM Access Control panel manufacturer and has been in business since 1992.

Combining an ACM system with Avigilon cameras and ACC software adds visual context to access records, and helps detect potential or in-progress attempts to breach security. Security personnel can use cameras at an access point to verify the identity of someone attempting to enter an area. To easily locate video of any past access attempts, ACC tags recorded video of access events detected by ACM. Newport Mesa Unified will have the ability to control cameras, and manage their access control in a single view.

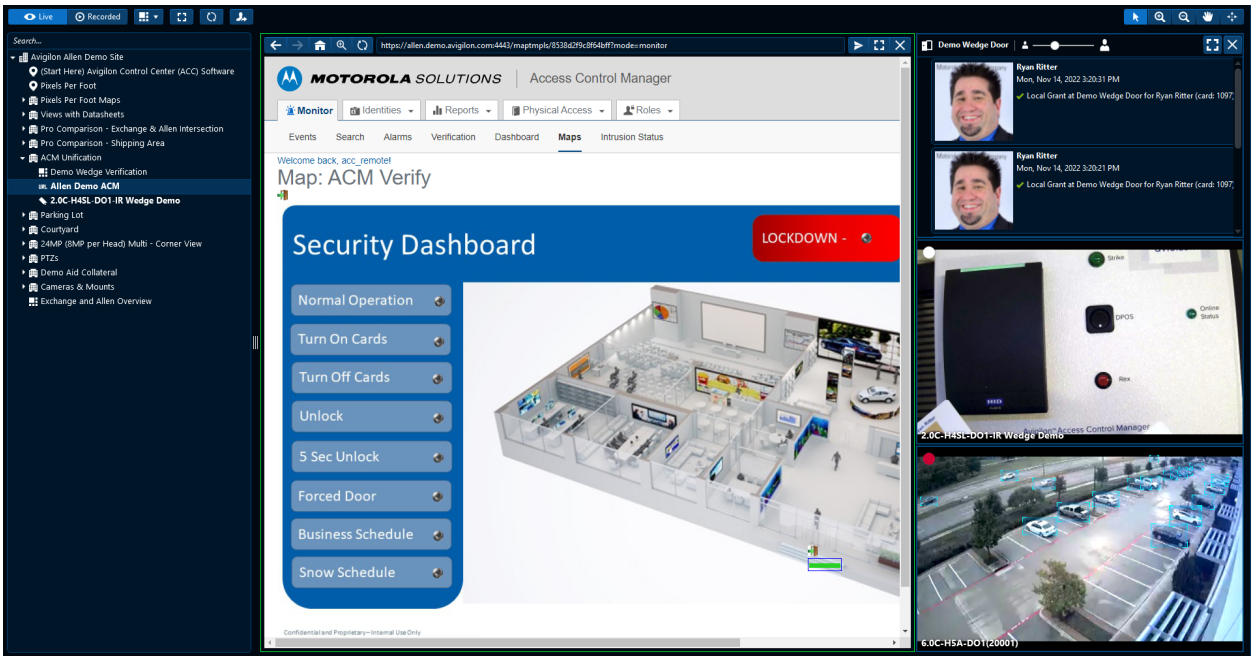

Access ACM inside of ACC*

As an open platform, ACM integrates with multiple intrusion detection systems). Newport Mesa Unified will be able to see alarms, and other important notifications through a single view in ACC/ACM. Sharing critical data between access control, video and intrusion detection systems allows association between intrusion alarms with access control and or video events.

The proposed video and access control capabilities will funnel detected information into AI analytics, transforming those alerts into actionable intelligence.

Analyze

As part of the complete end to end solution, analytics are built into Avigilon cameras and gives Newport Mesa Unified the ability to be more proactive in their security. Newport Mesa will also be able to utilize Avigilon's AI NVR's to add Avigilon's industry leading analytics to any ONVIF compliant, third party camera.

With so many people on campus, it can be hard to know what's really a threat. Administrators and teachers are always on the lookout, but even the best personnel cannot predict the future. Schools need a way to sort through the data and find the information that points to a developing incident.

Avigilon's self-teaching AI applications help administrators to understand available data and deploy resources as needed – before threats have a chance to develop.

Motion detection and Focus of Attention capabilities – Monitor low-traffic areas for intrusion and immediately capture information about possible threats.
Appearance and identity search – Organize event responses more quickly, sorting through video records to locate footage of known threats.
Video analytics – Scan the campus in real time for evidence of developing incidents.
Elevated temperature detection - Locate individuals with symptoms of an illness to screen entry and avoid outbreaks.

Ultimately, these solutions and insights are crucial to cutting through the noise, proactively locating points of interest and recognizing which events are important – so you can have eyes on the scene to evaluate and make an informed decision to take action. Together, this suite of applications applied pattern recognition, search, and self-learning capabilities to make your staff more effective at identifying potential threats.

Unusual Motion Detection

Unusual Motion Detection
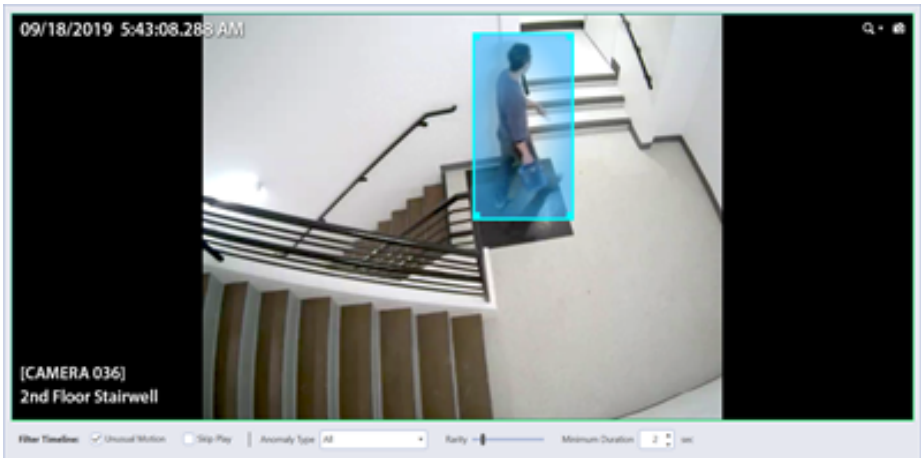
Alerts staff to unusual activity patterns. Classifies alerts by type, rarity, and duration. Shifts staff away from passive video monitoring.

Schools operate based on rigidly timed schedules, and students follow well-defined traffic patterns. Knowing what to expect helps to identify irregular activity, and may offer insight into developing security threats.

With ACC software's Unusual Motion Detection (UMD) technology, artificial intelligence takes on the mind-numbing task of monitoring areas for abnormal activity. UMD filters out video feeds of routine footage, focusing staff on potential threats or abnormal activity. This feature uses recorded video to establish a typical motion pattern in an area without user input. UMD then alerts staff members if it detects motion that does not fit that pattern. Pattern recognition develops over a period of up to two weeks and, once established, flags areas based on abnormal movement. ACC software logs events based on detected movement anomalies, and tags video of an event for later reference. Staff can search for events based on type, as well as event rarity and duration.

Appearance Search

Appearance Search
Locates video of a person or vehicle based on characteristics. Video bookmarking. Video sharing.

Building a record of locations and activities for unwanted or suspicious visitors can be critical for understanding how to respond, or for helping outside agencies to respond more effectively. Avigilon Appearance Search™ technology reviews hours of video in minutes to find a person or vehicle based on appearance characteristics. This saves time for staff members, reduces response times, and reduces the potential for human error. Criteria for finding people include: clothing color, gender, hair color, and age category, with categories for adults and children. Criteria for vehicles include: color, model, and type of vehicle. Available vehicle type categories include:

car, bus, truck, motorcycle, and bicycle. Whether searching for a specific individual or an unknown person based on a partial description, staff can narrow results down to relevant video. Equipped with this technology, personnel can zero in on a person or vehicle of interest and follow their activities as long as they are in the building.

After locating relevant video, staff can play and bookmark it, building a narrative related to persons of interest. If needed, staff can export and share video, images, search results, or bookmarked narratives from ACC software.

Self-Learning Video Analytics

Self-Learning Video Analytics
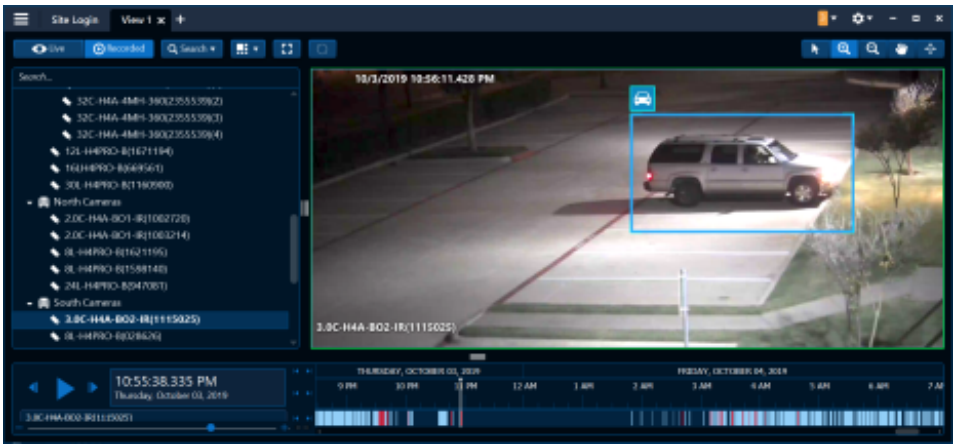
Key object and motion classification in video. Improved alert accuracy over time. Accepts user feedback to learn faster.

Artificial intelligence can enhance your team's surveillance capabilities by reviewing hours of video input to "learn" what to expect and identify pattern disruptions that may indicate a developing threat or hazard.

The self-learning feature supports Avigilon video analytics, better recognizing people and vehicle movement patterns over time without user input to provide more accurate alerts. Video analytics review past motion detection events to build up patterns that indicate whether a person or vehicle is in motion. Video analytics use those patterns to filter out background movement. In addition to reducing false alarms, self-learning analytics simplify searching archived video. Video analytics highlight videos with moving people or vehicles, filtering out video of unimportant background movement.

Though Avigilon video analytics learns patterns without input, staff can help speed the learning process and improve object classification using the Teach By Example function. With this function, staff apply markers to recorded video of a moving person or vehicle so that video analytics can compare that footage with live video. As more markers are added in different environmental conditions, video analytics becomes increasingly accurate in classifying people or objects in motion.

Identity Search

Identity Search
Locates video using ID records. Search refinement options.

To effectively control access to school facilities, your staff needs to be able to verify the identity of cardholders and quickly locate any imposters. Linking facility access attempts with recorded video makes it easy for staff to determine if a badge has been stolen or if an abnormal access attempt represents a developing threat.

Identity Search combines the facility protection capabilities of ACM with video analytics included with ACC software. Using a person's name or badge ID, staff can retrieve a record of a person's movements within Newport-Mesa Unified facilities based on what doors they attempted to open. Staff can refine results by changing what doors to include results for, and setting a date range for access events.

Focus of Attention

Focus of Attention
Overview of system status at a glance. Directs staff attention to video of important events. Quick access to alert details

As mentioned above, Focus of Attention (FoA) is designed to quickly find and detect analytic events.

With a flood of video footage from across campus, your staff cannot watch and analyze video from every camera. ACC's interface uses AI analysis to filter out camera feeds showing routine activity and direct your staff's focus to areas where their evaluation of events is crucial.

The ACC interface uses color-coded camera tags to direct staff members' attention to the most pressing ongoing events. Each camera's detection status is displayed on the "Overview" screen of ACC, providing staff members with a clear picture of the state of events across sites. When a camera reports an event, staff can select it in the interface to actively view video from it. Events use a specific color to let staff know what a camera detected, helping them determine what camera video feeds to actively view.

Communicate

As part of a fully integrated solution, Motorola Solutions' ecosystem goes beyond integrating access control & video. Analytic events and anomalies found in ACC or ACM can be automatically sent to Motorola radios.

A well-protected campus requires a well-directed team of teachers and officers who work together to keep kids safe. But personnel cannot always communicate easily. This requires tools that unify communications, and improve situational awareness.

MOTOTRBO™ two-way radio technology – Keep staff connected in hard-to-navigate environments.
Nitro™ - Flexible broadband data network architecture to support Newport-Mesa Unified's key applications in specific areas.
WAVE™ (Push-to-talk capability) – Personal and group communication between radios and connected phones, tablets, and other smart devices.
Dispatch applications to coordinate resources – Equips dispatchers with voice communications so they can inform personnel of an incident and direct a response to resolve it.
Mass notifications - Simultaneously communicate information to the groups that need it.

Communication – across devices and locations – is an important part of keeping you and your entire team aware and informed at all times. Our end-to-end communications solution can combine voice and data to enable a full understanding of potential incidents and, if possible, prevent them from occurring.

Radio Connectivity with Orchestrate

Radio Connectivity
Automatically alerts users via radio. Alerts include event details. Alerts can require user acknowledgement.

Radio connectivity proactively notifies staff members of unusual activity, potential threats, and possible hazards by sending voice, text and/or video alarms from Avigilon ACC software to MOTOTRBO radios. A range of events can be configured to trigger radio messages, including video analytics events, license plate watch list matches, unauthorized attempts to access a site, sensor events, and custom flags. The resulting message informs recipients of what event triggered the alert, and where that event took place.

Radio messages inform staff of suspicious activity without needing to monitor activity on a computer screen. Security personnel can patrol the premises, and investigate any alerts they receive on their MOTOTRBO radios. Other members of staff can also receive alarm notifications, automatically communicating potential security information to them so they can take appropriate actions. The connection also accepts messages from MOTOTRBO radios, enabling staff to acknowledge that they have received an alert.

Orchestrate

In helping Newport Mesa Unified achieve its goal of creating a more proactive security solution, Motorola Solutions' fully integrated security system has designed Orchestrate to improve efficiency and response times.

Creating and automating workflows for a comprehensive incident response and school safety solution is complicated. Orchestrate simplifies it. Orchestrate is a cloud-based platform that connects across voice, data, video, software, and analytics, helping administrators to control their integrated technology ecosystem more effectively. Using its intuitive, drag-and-drop user interface, administrators can create rule-based, automated workflows to enhance efficiency, shorten response times, and improve overall safety.

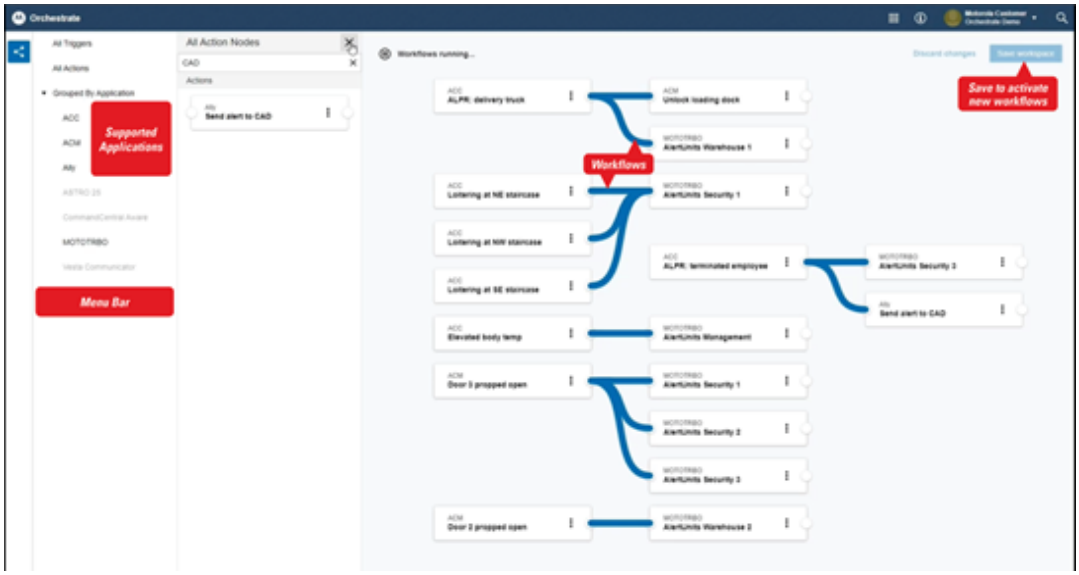

Example of Orchestrate automated workflows*

Respond

Some incidents cannot be prevented, but getting caught flat-footed makes incidents worse. School administrators and communities need a solution that mobilizes emergency responses immediately and disseminates real-time incident details to on-campus personnel. A robust suite of integrated emergency response technology and applications can get help where it's needed, coordinate onsite operations more effectively, and save lives for your community.

Access control to mitigate emergencies – Dynamically alter access permission to vulnerable or critical areas during emergencies, blocking access to potential threats.
CommandCentral Aware Enterprise - View information in one interface, simplifying intelligence development.
Critical Connect - Cloud-based interoperability solution to unify communications with public safety partners, and enhance collaboration for a unified response.
Connection to Law Enforcement – Use CommandCentral Aware to provide situational awareness for first responders by sending data to local law enforcement during an escalated incident.
Body-worn cameras - Record or stream video of emergencies and security incidents, creating a record of actions and a clearer understanding of events.

These tools help make certain the right resources are sent to an event, and that those resources have the most up-to-date information necessary to remedy the situation

Cloud Adoption

With the acquisition of Ava, Motorola Solutions gives Newport Mesa Unified the flexibility to move the video security to the cloud. With Ava's unique, open architecture, Newport Mesa Unified will be able to utilize any existing ONVIF-compliant, third-party camera and bring them onto the cloud via Ava's cloud connector, which means Newport Mesa Unified will not need to rip & replace existing or future cameras for cloud adoption.

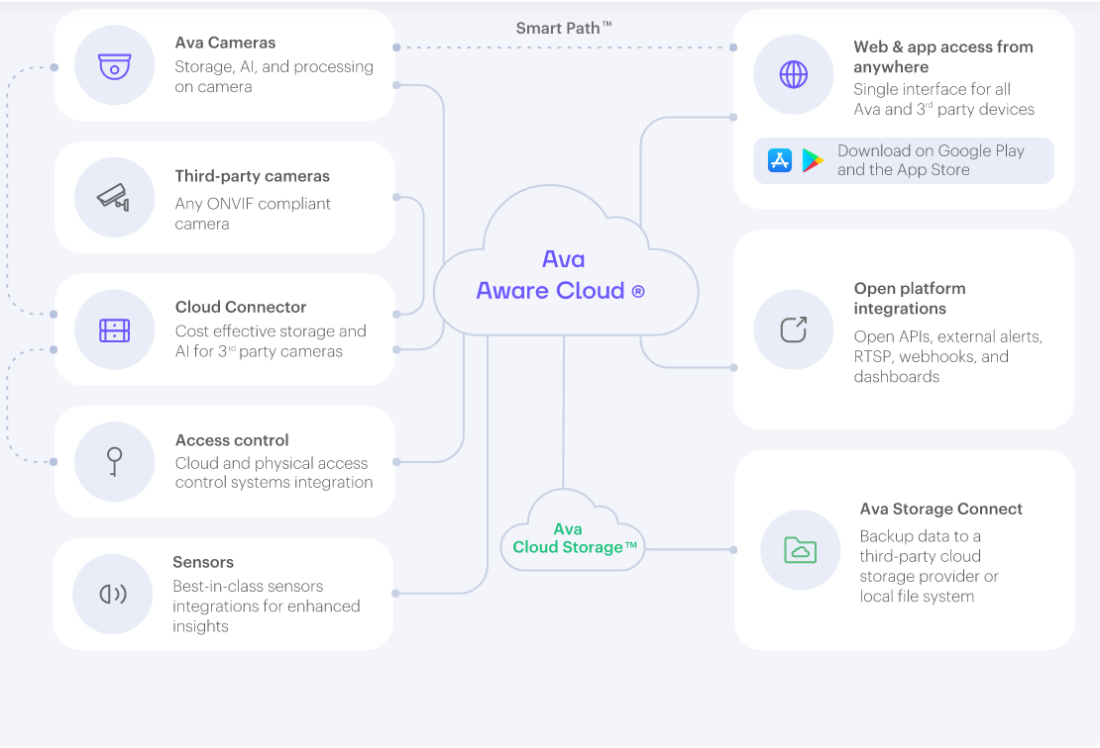

Through Motorola Solutions, Newport Mesa Unified will achieve its goal of bringing in a fully integrated, open, security solution that gives the district ultimate flexibility in the future.

Basic Cost Structure

Software License Fees

While the Avigilon ACC software is available at no cost, camera licenses are purchased (one time) at deployment and are perpetual licenses, owned by the end user. The licenses are sold individually. Please refer to the MSRP price sheet included in the response for a customized MSRP price for Newport Mesa Unified. There are no annual license fees or renewal charges.

Avigilon ACC software (server, client, player, etc.) are all available at no cost from our website (see below link).

http://avigilon.com/support-and-downloads/for-software/acc/downloads/

Customization required or proposed addressing specifications

No customization required for meeting RFP specification. Avigilon partners with 3rd party developers should the need arise in the future for an unknown or unprecedented integration.

Additional modules

There are no additional costs associated with the following modules/capabilities within Avigilon:

- Mapping
- Mobile Device usage
- Gateway Module (used for Mobile Device and Gateway Web Client connections)
- Integration with Avigilon Access Control Manager
- Alarm Gateway

Third party software options

Per the Avigilon MSRP price sheet, all available 3rd party integration modules for purchase through Avigilon are listed (e.g. a non-Avigilon Access Control system). In addition, Newport Mesa Unified would need to verify with the 3rd party if additional modules/integrations/licenses would be required by the 3rd party and any costs associated with them.

Avigilon Control Center (ACC) provides an open platform that enables easy integration with other systems. Our simple, yet powerful, Software Development Kit (SDK) provides a programming interface for almost all of the features available through the ACC Client software.

Please reference the submitted Avigilon MSRP price sheet regarding the one-time cost for the SDK.

Should the need ever arise, Avigilon partners with 3rd party software developers when a specific integration is desired that Avigilon does not offer. Those projects (and costs associated with them) are handled on a case-by-case basis.

Maintenance costs, to include annual costs

There are no Software Maintenance Agreements (SMAs) or Software Service Agreements (SSAs).

Software upgrades

There are no costs for .x version updates, and those are made available as needed typically every other month or quarterly. It is up to the customer to determine when/if an update will be applied (at no cost).

The time between major releases has historically been 2-4 years. Avigilon also historically continues to support previous versions. Avigilon is still supporting 6.x which was released 5 or 6 years ago. The major version upgrades are feature based and not 'troubleshooting' or 'bug-fixing' based. While Avigilon would typically recommend upgrading at some point to our latest version, it is not something we mandate for our customers.

The Avigilon Smart Assurance Plan* offers optimal protection for your Avigilon Control Center (ACC) video management software in the form of one and multi-year upgrade plans (3 and 5 year), ensuring you always have timely access to the newest capabilities and services over the life of your plan.

Technical support/customer service costs, to include annual costs

There are no annual license fees or renewal charges. There are no Software Maintenance Agreements (SMAs) or Software Service Agreements (SSA's). Technical support and customer service are offered at no charge for Newport Mesa Unified.

Support

Avigilon's Technical Support team can assist with any challenges that may arise during the day-to-day operation of the system: 24 hours a day, 7 days per week, 365 days a year. Again, there is no additional cost for Newport Mesa Unified or integrators to reach out to technical support or utilize Avigilon's support.

Avigilon's support can be utilized by dialing the support line (1-888-281-5182) and choosing Option 9, calls are automatically routed directly to the on-call Specialist's mobile number on the weekends. If the call is not immediately answered, the standard response is within 30 minutes.

System troubleshooting and resolution can be performed remotely for any Avigilon product, assuming remote connectivity is permitted by the end user (Newport Mesa Unified)

All cases are tracked and managed in a system which is actively monitored to ensure high quality response. Case numbers are assigned for easy reference for individual issues. Technical Support acts as the main point of contact so that the customer is not being forwarded or transferred to other departments.

If an issue requires escalation to the Engineering team, Technical Support acts as a liaison on behalf of the customer/NMUSD, and works with them for an efficient resolution. In addition, and for cases with unique circumstances, the Tech Support team not only engages Engineering, but also the product development team.

Support can be obtained via several methods, depending on preference:

- By phone 1-888-281-5182, All international numbers available at http://avigilon.com/contact-us
- Online form http://avigilon.com/contact-us/
- Email: response within 4-12 hours
- Self-service through the Avigilon Resource Center (online partner portal)
- Chat support: Available via Avigilon's website (see link and snapshot image below): http://avigilon.com/contact-us/

Motorola offers Professional Services through our Certified Partners to provide services that are often beyond the scope of the system's initial deployment. Motorola's own highly trained professionals can be deployed remotely or on-site to provide Audit Services, Configuration Services, Network Services and System Troubleshooting. These engagements are customized for each client with a detailed SOW (Scope-of-Work) to solve a specific need. SOW details and pricing are customized for each request.

Example of Motorola Professional Services include:

- Auditing the site annually to verify video resolution, frame rate and retention time meet specific compliance requirements.
- Installation and configuration of the users own Security Certificates to encrypt network traffic.

- Troubleshoot configurations of 3rd party networking devices including switches, routers and firewalls.
- Review and optimize video analytics to reduce false alarms and improve operational performance.

5. System Diagram

Sample Network Topology for Video

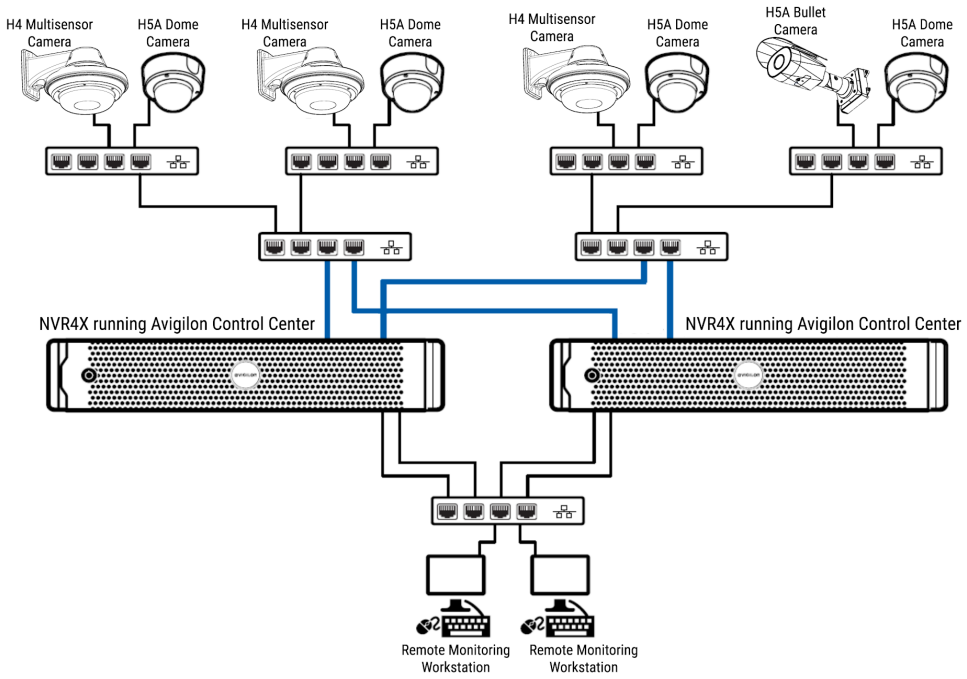

Sample Topology for Access Control

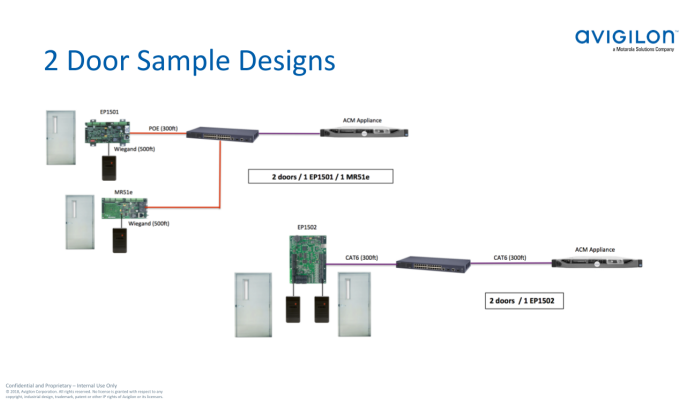

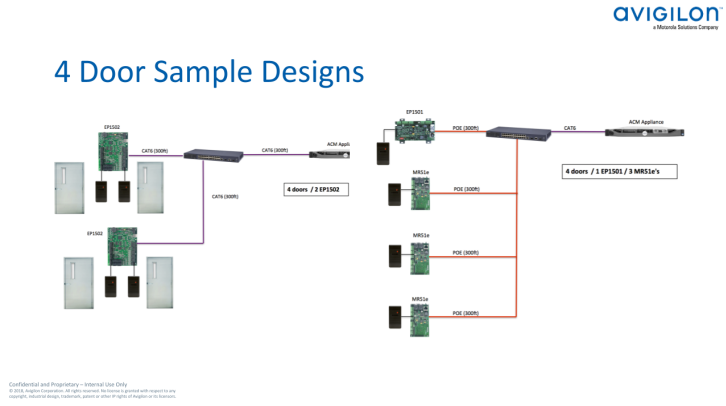

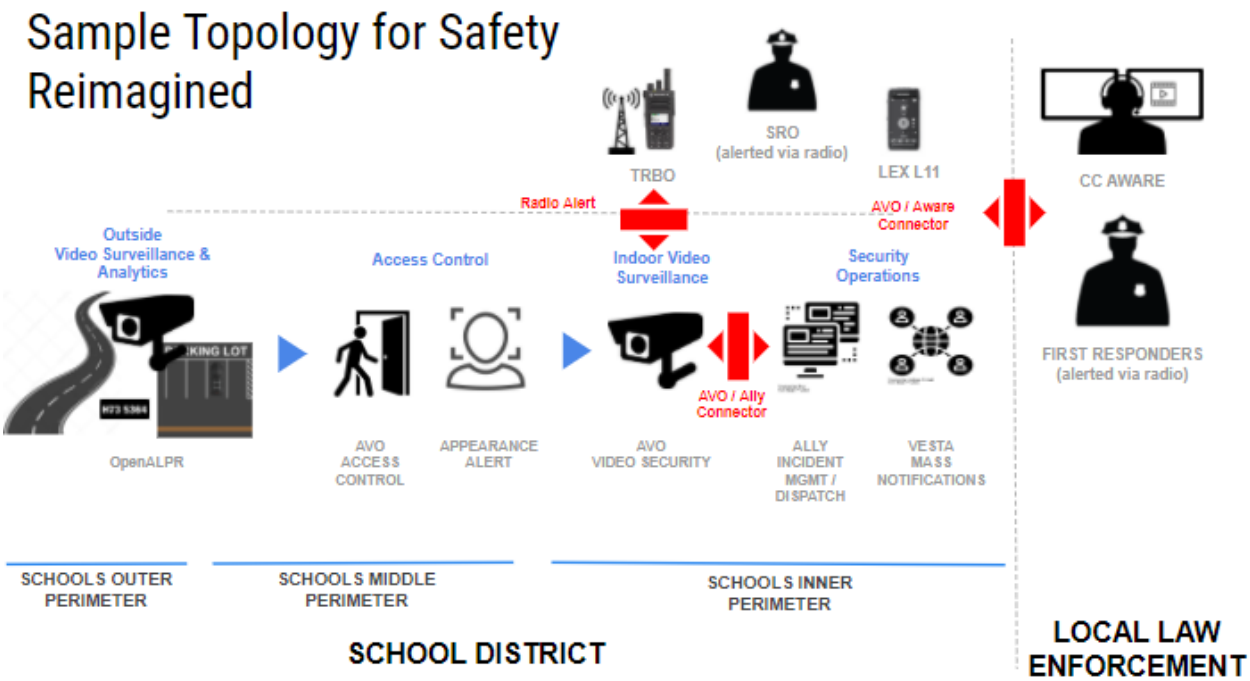

NVR5X - The fifth-generation Avigilon Network Video Recorder (NVR5) delivers unparalleled, high-performance recording, throughput, data availability, and protection for your Avigilon video security system. Featuring the densest storage capacity Avigilon has to offer on a single NVR, security teams can quickly scale up to petabytes of storage at a single location, with up to 432TB in storage per NVR.

Remote Monitoring Workstation - Avigilon's Remote Monitoring Workstations are purpose-built to accompany Avigilon's Network Video Recorders (NVRs) or to expand and scale existing deployments with a cost-effective high-performance workstation for remote monitoring. Designed to work seamlessly with Avigilon Control Center™ video management software, the Remote Monitoring Workstations enable users to view high definition video streams on multiple monitors or video walls.

H4 Multisensor Camera - The H4 Multisensor camera line combines Avigilon self-learning video analytics with exceptional coverage, featuring 3 or 4 individually configurable camera sensors that can be positioned to monitor 180°, 270°, or 360° fields of view. With up to 32 MP effective resolution, the H4 Multisensor can provide the image quality needed to cover larger areas with excellent detail.

H5A Dome Camera - A camera in Avigilon H5A camera line in a dome form factor which features our embedded Next-Generation Video Analytics for enhanced object detection, tracking and

classification, Unusual Activity Detection (UAD), and support for Avigilon Appearance Search™ technology to help ensure critical events do not go unnoticed. Comes in either 2MP, 4MP, 6MP, or 8MP resolutions.

H5A Bullet Camera - A camera in Avigilon H5A camera line in a bullet form factor which features our embedded Next-Generation Video Analytics for enhanced object detection, tracking and classification, Unusual Activity Detection (UAD), and support for Avigilon Appearance Search™ technology to help ensure critical events do not go unnoticed. Also features IR ranges up to 295 ft. depending on lens type. Comes in either 2MP, 4MP, 5MP, 6MP, or 8MP resolutions and focal lengths up to 22mm.

AI NVR - The Artificial Intelligence Network Video Recorder (AI NVR) is a cloud-ready, enterprise-hardened, managed solution that alleviates maintenance costs and unlocks Avigilon's Next-Generation Video Analytics capabilities for non-analytic and third-party cameras. Built on Avigilon's hardened operating system (OS), the AI NVR offers advanced remote management capabilities that streamline the deployment and management of the AI NVR. At a click of a button, you can remotely upgrade the entire site of AI NVRs, cameras, and clients with a single signed and encrypted firmware package from Avigilon Cloud Services (ACS) or Avigilon Control Center (ACC) client on a local network.

Next-Generation Video Analytics - Avigilon's most advanced analytics technology uses neural networks to power self-learning video analytics, delivering improved accuracy in both perimeter protection and in crowded, indoor environments. Added processing power enables the tracking and classification of over 50 objects within a field of view. More processing power enhances Avigilon Appearance Search™ technology by expanding the ability to search for a person or vehicle in both crowded and indoor environments. Avigilon video analytics not only classifies people and vehicles, but can also classify vehicles into subtypes which include car, truck, bus, motorcycle, and bicycle. Allowing a user to search for events specifically generated by people or vehicle types can increase efficiency and reduce investigation times.

Appearance Search - Avigilon Appearance Search™ video analytics technology is a sophisticated deep learning AI search engine for video. It sorts through hours of video with ease, to quickly locate a specific person or vehicle of interest by entering physical descriptions, uploading a photo, or by finding an example within recorded video. Appearance Search can improve incident response time and enhance forensic investigations by helping operators compile robust video evidence, create a powerful narrative of events, and reveal a vehicle or individual's route or last-known location.

UAD - Unusual Activity Detection (UAD) provides new edge-based intelligence that uses advanced AI technology. It is designed to enable the detection of atypical activities, such as people and vehicles traveling at faster speeds or are in unusual locations and alert operators.

ACC - Avigilon Control Center (ACC) software is an easy-to-use video management software that is designed to optimize the way security professionals manage and interact with high-definition video. It efficiently captures and stores high definition video, while intelligently managing bandwidth and storage using our patented High Definition Stream Management (HDSM) technology.

HDSM - High Definition Stream Management is a stream management technology that drastically reduces serve-rclient bandwidth requirements and makes optimal use of client computing resources, enabling greater scalability and increased camera resolution. HDSM technology stores the video information on the server as small packets. Simultaneously, HDSM separates the video into multiple usable segments: lower resolution and smaller size streams for situational awareness, and much larger streams for full image detail. HDSM then intelligently manages these streams based on what the user is viewing

ACM - Avigilon Access Control Manager™ 6 Enterprise and Enterprise Plus Systems The Access Control Manager (ACM) system is an IT-friendly Physical Access Control System (PACS) from Avigilon for enterprise-class installations. It's a complete access solution that is designed to keep your focus on securing your people, property and assets, and maximizing your time by helping you respond immediately to alerts wherever you are. The ACM™ system is a browser-based solution that can integrate with existing IT/HR systems, minimizing the need for duplicate data entry. It comes with a full set of standard features that not only help to maximize your time, but will reliably safeguard your information.

ACM Virtual - Avigilon Access Control Manager™ 6 Virtual is a physical access control system (PACS) that is VMware Ready™ for deployment in a virtual server environment, eliminating the need to maintain a separate, stand-alone server or dedicated network appliance. Access Control Manager Virtual is purpose-built for organizations that have migrated their IT infrastructure to a secure, private cloud environment, allowing them to maintain enterprise-grade physical security without the risk of storing sensitive information on a shared server hosted in a public cloud.

6. System requirements for off-the-shelf computer equipment utilized by the system

Avigilon Control Center Server and Analytic Requirements:

SYSTEM REQUIREMENTS	MINIMUM	RECOMMENDED
Operating System	Windows Server 2012 R2, Windows 8.1 (64-bit) or Windows 10 (64-bit), Windows Server 2016, Windows Server 2019	Windows Server 2016 or Windows 10
Processor	x86 64 bit dual-core (1.9 GHz) SSE2	Intel® Xeon® E5 v3 (6 cores, 1.9GHz)
System RAM	4 GB DDR3	16 GB DDR4
Network Interface	1 Gbps	4 x 1 Gbps
Hard Drives	SATA-II 7200 RPM Enterprise Class Hard Drives	SATA-III 7200 RPM Enterprise Class Hard Drives

SOFTWARE SYSTEM REQUIREMENTS	APPEARANCE SEARCH ONLY	APPEARANCE SEARCH AND FACE RECOGNITION
NVIDIA GPU Requirements	• 4 GB RAM • NVIDIA Turing™, NVIDIA Pascal™ or NVIDIA Maxwell™ architecture • CUDA compute capability 7.5, 6.1 or 5.2 • Windows x86_64 Driver Version 451.48 or above (462.31 if Turing)	• 4 GB RAM • NVIDIA Turing™ architecture, NVIDIA T1000 video card, NVIDIA Pascal™ architecture or NVIDIA Quadro P1000 video card • CUDA compute capability 7.5 or 6.1 • Windows x86_64 Driver Version 451.48 or above (462.31 if Turing)

Avigilon Control Center Workstation Requirements:

SYSTEM REQUIREMENTS	MINIMUM	RECOMMENDED
Operating System	Windows 8.1 (64-bit) or Windows 10 (64-bit)	Windows 10 (64-bit)
Processor	Intel Quad-core CPU (2.0 GHz) SSE2	8th Generation Intel Celeron CPU or higher
System RAM	4 GB DDR3	8 GB DDR4
Network Interface	1 Gbps	1 Gbps
Video Card	PCI Express, DirectX 10.0 compliant with 256 MB RAM	NVIDIA Quadro P620
Hard Drives	SATA-II 7200 RPM Hard Drives	SATA-III 7200 RPM Hard Drives

7. Cyber Security Program

Avigilon is dedicated to making sure our hardware and software meets and exceeds the Cybersecurity standards of the security camera industry. With automatic firmware/ software updates, FIPS-140-2 compliant hardware and software, support for encrypted video streams, and NDAA compliance we have been able to meet the requirements for government and military installations around the US.

8. Itemized Pricing Proposal

Motorola Solutions does not sell directly to end users such as Newport Mesa Unified nor do we quote final pricing. Final pricing is quoted by Motorola Solutions' integrated partners.

Therefore, Motorola Solutions presents Newport Mesa with the following itemized pricing proposal. These prices are at MSRP for NMUSD's reference and do not include the cost of labor and installation (provided by the certified integrator). The MSRP pricing is not the final price for Newport Mesa Unified. To help gain a better understanding, pricing from 3 selected integrators for the same bill of materials have been included in the Supplemental Data (Section 14) for the district's reference. This is also not a final price for the district but rather a reference point. Motorola Solutions will work closely with Newport Mesa Unified to identify the best integrator to maintain the best service and fair pricing for all materials and installation.

Confidential
Date: 2022-11-01
Quote #: Q-883375
Quote Name: Newport Mesa Unified Initial BOM
Prepared By: Daniel Dukes
Prepared For:

Bill To:
Newport Mesa Unified School District
2985 Bear Street
Costa Mesa, CA, 92626
United States

Ship To:

STORAGE				
MODEL NUMBER	**DESCRIPTION**	**QTY**	**NET UNIT PRICE**	**LINE TOTAL**
AINVR-STD-24TB-NA	AI NVR Standard, 24TB, NA	30.00	$17,434.92	$523,047.60

CAMERA				
MODEL NUMBER	**DESCRIPTION**	**QTY**	**NET UNIT PRICE**	**LINE TOTAL**
4.0C-H5A-DO1-IR	4.0 MP WDR, LightCatcher, Day/Night, Outdoor Dome, 3.3-9mm f/1.3 P-iris lens, Integrated IR, Next-Generation Analytics	346.00	$1,347.77	$466,328.42
20C-H4A-4MH-360	4x 5 MP, WDR, LightCatcher, 2.8mm, Camera Only	60.00	$2,478.05	$148,683.00

SOFTWARE				
MODEL NUMBER	**DESCRIPTION**	**QTY**	**NET UNIT PRICE**	**LINE TOTAL**
ACC7-ENT	ACC 7 Enterprise camera channel	406.00	$316.51	$128,503.06
ACC-ENT-SMART-1YR	ACC Enterprise Smart Plan, 1 year	406.00	$32.10	$13,032.60

ACCESSORIES				
MODEL NUMBER	**DESCRIPTION**	**QTY**	**NET UNIT PRICE**	**LINE TOTAL**
H4AMH-AD-PEND1	Outdoor pendant mount adapter, must order one of IRPTZ-MNT-Wall1 or IRPTZ-MNT-NPTA1 and one of H4AMH-DO-COVR1 or H4AMH-DO-COVR1-SMOKE.	60.00	$188.80	$11,328.00
H4AMH-DO-COVR1	Outdoor Dome Cover for H4 Multisensor	60.00	$188.80	$11,328.00
IRPTZ-MNT-WALL1	Pedant wVideo mount adapter. For use with H4 IR PTZ or H4A-MH-AD-PEND1 on H4 Multisensor.	60.00	$112.11	$6,726.60
H4AMH-AD-IRIL1	Optional IR illuminator ring, up to 30m (100ft), for use with H4AMH-DO-COVR1.	60.00	$389.40	$23,364.00

NETWORKING				
MODEL NUMBER	**DESCRIPTION**	**QTY**	**NET UNIT PRICE**	**LINE TOTAL**
POE-INJ2-60W-NA	Indoor single port Gigabit PoE++ 60W, North American power cord included. May also be used in European Union, Japan, Australia, New Zealand, Mexico, China, South Korea, Russia, Argentina, Saudi Arabia, Kuwait, UAE and Brazil. Temperature range of the PoE injector is -10C to +45C (14 °F to 113 °F). When used with the H4 IR PTZ, the camera will operate in a reduced temperature range from -10 °C to +50 °C (14 °F to 122 °F).	60.00	$177.00	$10,620.00
SM24TAT2SA-NA	24-Port Gigabit Managed Switch (24) PoE+ budget 370W, (2) SFP - NA	17.00	$1,606.90	$27,300.30

Currency	USD
MSRP Subtotal	$1,370,261.58
Estimated Shipping & Handling	Not Included
Estimated Tax	Not Included
Total	**$1,370,261.58**

© 2022, Avigilon Corporation. All rights reserved. AVIGILON and the AVIGILON logo are trademarks of Avigilon

Notes:

This quote is subject to the following conditions and parameters:

1. This is a quote setting out the proposed price at which Avigilon is prepared to supply the products and services described herein. It is not intended to create a legally binding contract.

2. This quote is subject to the terms of the Avigilon partner agreement between you and Avigilon. This quote may be cancelled at Avigilon's discretion at any time, including following acceptance of this quote by you, if you are in default of the terms of your partner agreement.

3. The quoted prices are subject to change without notice. Avigilon reserves the right to withdraw this quote at its discretion at any time prior to it being accepted by you. Unless earlier withdrawn by Avigilon, the prices herein are valid for [30] days from the date of this quote.

4. Any shipping costs referenced in this quote are an estimate only and do not form a part of the price quotation for any purchase made in reliance upon this quote. Actual shipping costs may be different than the estimate referenced herein.

5. All products purchased by you from Avigilon will be on a Free Carrier (FCA) basis per Incoterms 2010 at a place to be named by Avigilon.

6. Prices do not include (or only include an estimate of) any applicable provincial sales tax, goods and services tax, duties, state sales tax, or any other taxes levied on the sale of products or services. Actual taxes and duties may be different than the estimate referenced herein.

7. This quote contains confidential information and is only for the intended addressee(s).

To accept this quotation and to purchase please sign below and return

Signature: _____

Print Name: _____

Title: _____

Customer PO #: _____

© 2022, Avigilon Corporation. All rights reserved. AVIGILON and the AVIGILON logo are trademarks of Avigilon

avigilon™
a Motorola Solutions Company

Project Name
Newport Mesa

Date 11/11/2022
Quotation # 57832453288

Quotation For

Prepared by: Phillip Koken

Comments or Special Instructions

Quotation is valid for a period of thirty (30) days from the above date

QTY	Model Name	Description	MSRP	Line Total
1	AC-APP-128R-ENT2-6	Access Control Manager Enterprise 6 – Enterprise Appliance for 128 Readers	$ 10,368.30	$ 10,368.30
1	AC-SW-LIC-BDGE-6-P	Access Control Manager 6 Badging Software Licenses	$ 909.14	$ 909.14
1	AC-SW-LIC-LDAP-6-P	Access Control Manager 6 LDAP Directory Connectivity Software License	$ 2,728.50	$ 2,728.50
3	AC-SW-LIC-BOSCHINTR-10PANEL-6-P	Access Control Manager 6 Bosch Integration Software Licenses	$ 3,274.20	$ 9,822.60
4	AC-MER-CONT-LP1502	Intelligent Controller (Mercury Part #: LP1502)	$ 1,480.69	$ 5,922.76
62	AC-MER-CON-MR52-S3B	Series 3B Two-Reader Interface Module (Mercury Part #: MR52-S3B)	$ 856.18	$ 53,083.16
2	AC-LSP-4DR-MER-LCK	Lifesafety Power Four Door Mercury Dual Voltage Integrated Power System	$ 693.78	$ 1,387.56
3	AC-LSP-8DR-MER-LCK	Lifesafety Power Eight Door Mercury Dual Voltage Integrated Power System	$ 948.78	$ 2,846.34
7	AC-LSP-16DR-MER-LCK	Lifesafety Power Sixteen Door Mercury Dual Voltage Integrated Power System	$ 1,516.23	$ 10,613.61
130	AC-HID-READER-SIGNO-40NKS-T1-000000	HID 40NKS-T1-000000	$ 302.03	$ 39,263.90
1	AC-SW-LIC-16RCU-6-P	Access Control Manager 6 Sixteen Doors Expansion Software Licenses	$ 909.14	$ 909.14
		0	$ -	$ -
		0	$ -	$ -
		0	$ -	$ -
			Subtotal	$ 137,855.01
			Total USD	**$ 137,855.01**

Thank you for your business!

Integrator is responsible for accuracy in Counts, Design, Functionality, and Implementation

Equipment listed above is not a reflection of a complete, functioning system.

This quote is subject to the following conditions and parameters:

1. This is a quote setting out the proposed price at which Avigilon is prepared to supply the products and services described herein. It is not intended to create a legally binding contract.

2. This quote is subject to the terms of the Avigilon partner agreement between you and Avigilon. This quote may be cancelled at Avigilon's discretion at any time, including following acceptance of this quote by you, if you are in default of the terms of your partner agreement.

3. The quoted prices are subject to change without notice. Avigilon reserves the right to withdraw this quote at its discretion at any time prior to it being accepted by you. Unless earlier withdrawn by Avigilon, the prices herein are valid for [30] days from the date of this quote.

4. Any shipping costs referenced in this quote are an estimate only and do not form a part of the price quotation for any purchase made in reliance upon this quote. Actual shipping costs may be different than the estimate referenced herein.

5. All products purchased by you from Avigilon will be on a Free Carrier (FCA) basis per Incoterms 2010 at a place to be named by Avigilon.

6. Prices do not include (or only include an estimate of) any applicable sales tax, goods and services tax, duties, state sales tax, or any other taxes levied on the sale of products or services. Actual taxes and duties may be different than the estimate referenced herein.

7. This quote contains confidential information and is only for the intended addressee(s).

To accept this quotation and to purchase please sign below and return:

Signature: _____

Print Name:_____

Title:_____

SALES | +1.604.629.5182 | sales@avigilon.com TECHNICAL SUPPORT | +1.888.281.5182 | support@avigilon.com

© 2020, Avigilon Corporation. All rights reserved. AVIGILON and the AVIGILON logo are trademarks of Avigilon Corporation.

Customer PO #:_____

9. Product Data

NVR5X - The fifth-generation Avigilon Network Video Recorder (NVR5) delivers unparalleled, high-performance recording, throughput, data availability, and protection for your Avigilon video security system. Featuring the densest storage capacity Avigilon has to offer on a single NVR, security teams can quickly scale up to petabytes of storage at a single location, with up to 432TB in storage per NVR.

Remote Monitoring Workstation - Avigilon's Remote Monitoring Workstations are purpose-built to accompany Avigilon's Network Video Recorders (NVRs) or to expand and scale existing deployments with a cost-effective high-performance workstation for remote monitoring. Designed to work seamlessly with Avigilon Control Center™ video management software, the Remote Monitoring Workstations enable users to view high definition video streams on multiple monitors or video walls.

H4 Multisensor Camera - The H4 Multisensor camera line combines Avigilon self-learning video analytics with exceptional coverage, featuring 3 or 4 individually configurable camera sensors that can be positioned to monitor 180°, 270°, or 360° fields of view. With up to 32 MP effective resolution, the H4 Multisensor can provide the image quality needed to cover larger areas with excellent detail.

H5A Dome Camera - A camera in Avigilon H5A camera line in a dome form factor which features our embedded Next-Generation Video Analytics for enhanced object detection, tracking and classification, Unusual Activity Detection (UAD), and support for Avigilon Appearance Search™ technology to help ensure critical events do not go unnoticed. Comes in either 2MP, 4MP, 6MP, or 8MP resolutions.

H5A Bullet Camera - A camera in Avigilon H5A camera line in a bullet form factor which features our embedded Next-Generation Video Analytics for enhanced object detection, tracking and classification, Unusual Activity Detection (UAD), and support for Avigilon Appearance Search™ technology to help ensure critical events do not go unnoticed. Also features IR ranges up to 295 ft. depending on lens type. Comes in either 2MP, 4MP, 5MP, 6MP, or 8MP resolutions and focal lengths up to 22mm.

AI NVR - The Artificial Intelligence Network Video Recorder (AI NVR) is a cloud-ready, enterprise-hardened, managed solution that alleviates maintenance costs and unlocks Avigilon's Next-Generation Video Analytics capabilities for non-analytic and third-party cameras. Built on Avigilon's hardened operating system (OS), the AI NVR offers advanced remote management

capabilities that streamline the deployment and management of the AI NVR. At a click of a button, you can remotely upgrade the entire site of AI NVRs, cameras, and clients with a single signed and encrypted firmware package from Avigilon Cloud Services (ACS) or Avigilon Control Center (ACC) client on a local network.

Next-Generation Video Analytics - Avigilon's most advanced analytics technology uses neural networks to power self-learning video analytics, delivering improved accuracy in both perimeter protection and in crowded, indoor environments. Added processing power enables the tracking and classification of over 50 objects within a field of view. More processing power enhances Avigilon Appearance Search™ technology by expanding the ability to search for a person or vehicle in both crowded and indoor environments. Avigilon video analytics not only classifies people and vehicles, but can also classify vehicles into subtypes which include car, truck, bus, motorcycle, and bicycle. Allowing a user to search for events specifically generated by people or vehicle types can increase efficiency and reduce investigation times.

Appearance Search - Avigilon Appearance Search™ video analytics technology is a sophisticated deep learning AI search engine for video. It sorts through hours of video with ease, to quickly locate a specific person or vehicle of interest by entering physical descriptions, uploading a photo, or by finding an example within recorded video. Appearance Search can improve incident response time and enhance forensic investigations by helping operators compile robust video evidence, create a powerful narrative of events, and reveal a vehicle or individual's route or last-known location.

UAD - Unusual Activity Detection (UAD) provides new edge-based intelligence that uses advanced AI technology. It is designed to enable the detection of atypical activities, such as people and vehicles traveling at faster speeds or are in unusual locations and alert operators.

ACC - Avigilon Control Center (ACC) software is an easy-to-use video management software that is designed to optimize the way security professionals manage and interact with high-definition video. It efficiently captures and stores high definition video, while intelligently managing bandwidth and storage using our patented High Definition Stream Management (HDSM) technology.

HDSM - High Definition Stream Management is a stream management technology that drastically reduces serve-rclient bandwidth requirements and makes optimal use of client computing resources, enabling greater scalability and increased camera resolution. HDSM technology stores the video information on the server as small packets. Simultaneously, HDSM separates the video into multiple usable segments: lower resolution and smaller size streams for situational

awareness, and much larger streams for full image detail. HDSM then intelligently manages these streams based on what the user is viewing

ACM - Avigilon Access Control Manager™ 6 Enterprise and Enterprise Plus Systems The Access Control Manager (ACM) system is an IT-friendly Physical Access Control System (PACS) from Avigilon for enterprise-class installations. It's a complete access solution that is designed to keep your focus on securing your people, property and assets, and maximizing your time by helping you respond immediately to alerts wherever you are. The ACM™ system is a browser-based solution that can integrate with existing IT/HR systems, minimizing the need for duplicate data entry. It comes with a full set of standard features that not only help to maximize your time, but will reliably safeguard your information.

ACM Virtual - Avigilon Access Control Manager™ 6 Virtual is a physical access control system (PACS) that is VMware Ready™ for deployment in a virtual server environment, eliminating the need to maintain a separate, stand-alone server or dedicated network appliance. Access Control Manager Virtual is purpose-built for organizations that have migrated their IT infrastructure to a secure, private cloud environment, allowing them to maintain enterprise-grade physical security without the risk of storing sensitive information on a shared server hosted in a public cloud.

Sample Network Topology for Video

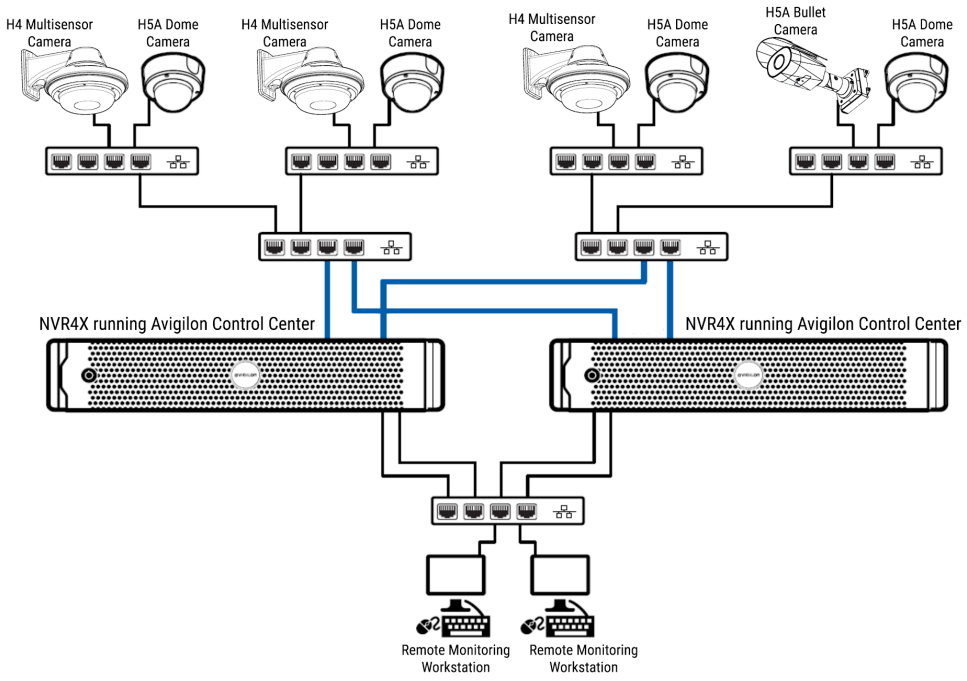

Sample Topology for Access Control

2 Door Sample Designs

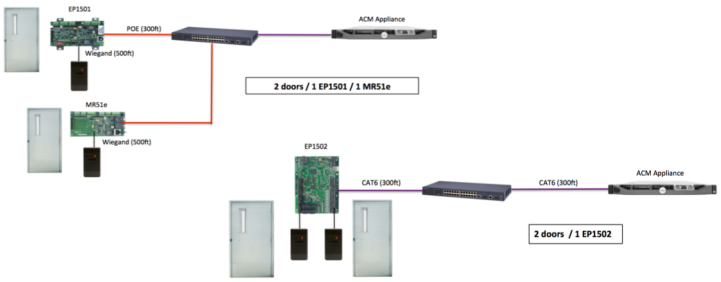

Confidential and Proprietary – Internal Use Only
© 2016, Avigilon Corporation. All rights reserved. No license is granted with respect to any copyright, industrial design, trademark, patent or other IP rights of Avigilon or its licensors.

4 Door Sample Designs

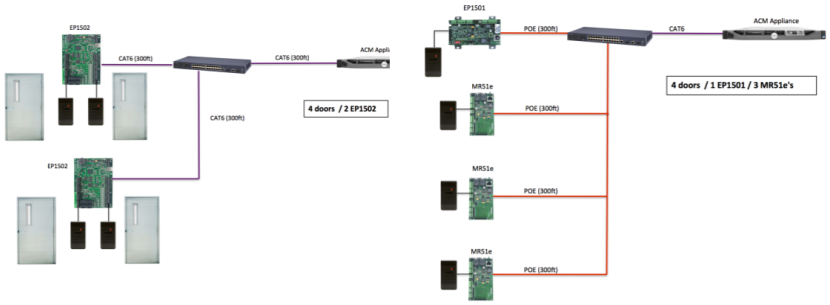

Confidential and Proprietary – Internal Use Only
© 2016, Avigilon Corporation. All rights reserved. No license is granted with respect to any copyright, industrial design, trademark, patent or other IP rights of Avigilon or its licensors.

Sample Topology for Safety Reimagined

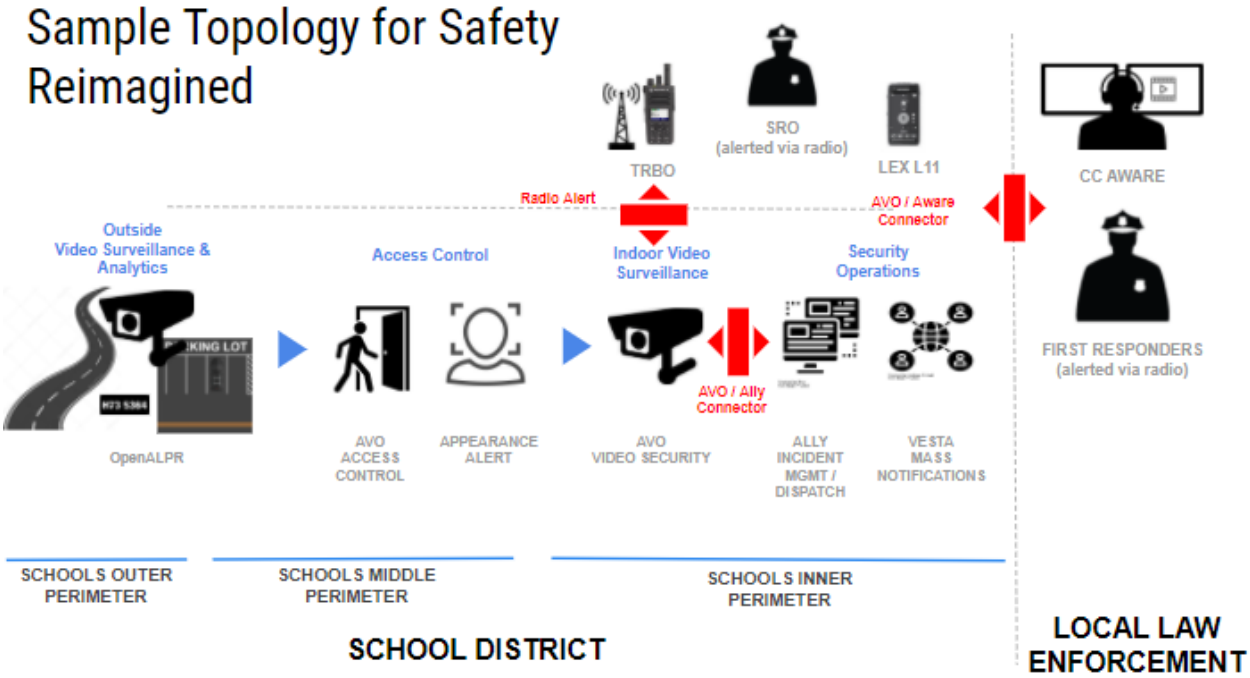

SMART SECURITY SOLUTIONS FOR EDUCATION

Avigilon provides comprehensive video security and access control solutions that help you create a safe and secure environment and protect what is most valuable — your students, staff and faculty.

AI-POWERED VIDEO SECURITY

Avigilon Control Center (ACC) software provides an easy-to-use, AI-enabled user interface that brings the right information to you so that you can take action, helping ensure critical events do not go unnoticed.

POWERFUL SEARCH

Avigilon Appearance Search™ technology sorts through hours of video with ease to quickly locate a specific student, visitor or vehicle of interest across school grounds in near real-time.

USER-FRIENDLY DESIGN

User-friendly software is straightforward and intuitive, allowing your School Resource Officer to operate and manage the system, whether they are an IT novice or an expert.

EASY INTEGRATION AND COST SAVINGS

Our open platform security solutions allow for easy integration with your existing systems and technology, allowing you to expand your security solution with no overhaul required, and our video management system (VMS) works with both HD and analog cameras. Our cameras are compatible with a variety of VMS platforms and our access control solutions support open field hardware from other leading manufacturers.

EFFICIENT BANDWIDTH MANAGEMENT

Avigilon's High Definition Stream Management (HDSM) and HDSM SmartCodec™ technologies reduce bandwidth and storage needs while maintaining image quality, helping to keep internet connectivity costs down.

ORCHESTRATE

A simple, user-friendly and cloud-based workflow automation tool that gives you the ability to configure and automate workflows that control your integrated technology ecosystem.

AVIGILON CLOUD SERVICES

Manage multiple campuses from anywhere with convenient, centralized access to your system using a browser or our ACC Mobile app and remotely monitor the health of all your cloud-connected ACC sites to quickly assess maintenance activities.

H4 VIDEO INTERCOM

Combines a 3 MP wide dynamic range, low-light camera, with a high-performance intercom featuring noise reduction and echo-canceling technologies.

AI NVR

A purpose-built security-hardened NVR, with built-in server-side analytics that unlocks Avigilon's advanced AI capabilities for any connected video stream, including third party and non-analytic cameras.

ACCESS CONTROL MANAGER (ACM)

ACM generated door events allow you to create rule-based actions and notifications for quick on-site responses, including immediate school-wide lockdown.

MOTOROLA SOLUTIONS

NEXT GENERATION SAFETY FOR THE NEXT GENERATION

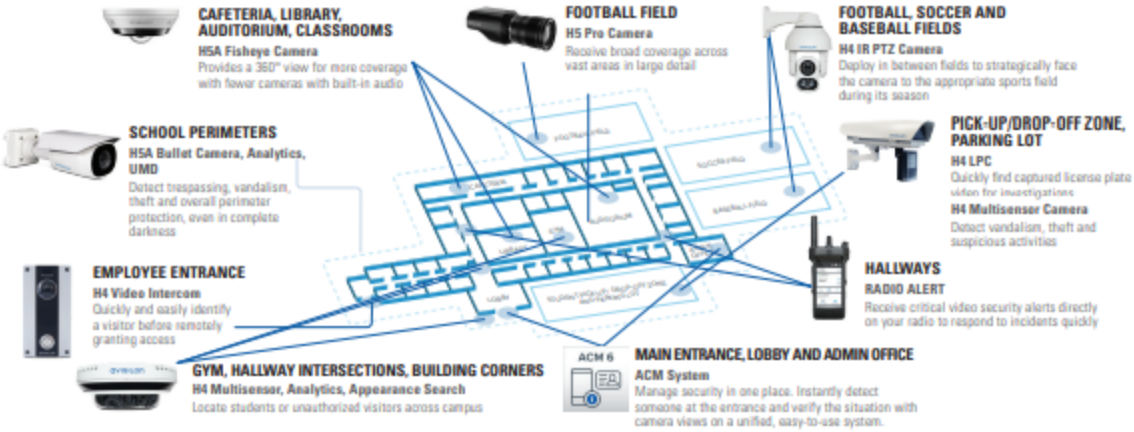

COVID-19 RESPONSE SOLUTIONS FOR EDUCATION

NO FACE MASK DETECTION

Detects individuals who are in violation of face mask policies, promting an automated alert through ACC™ video management software for quick, corrective action.

SOCIAL DISTANCING ANALYTICS

AI-powered analytics on Avigilon video security cameras can continuously monitor social distancing efforts within your school. Run a report of when social distancing violations occur, as well as recognize high violation zones and times requiring corrective measures.

OCCUPANCY COUNTING

Know how many students and staff members are inside a room at any given time, determine peak periods, and understand high traffic entry or exit points that require further attention.

ELEVATED TEMPERATURE DETECTION

Increase the efficiency of traditional physical screening efforts with a high-throughput and contactless method of pre-screening people at access points. The H4 Thermal Elevated Temperature Detection solution detects and notifies operators if individuals exhibit indications of elevated body temperature so that further evaluation may take place.

Avigilon, a Motorola Solutions company, designs, develops and manufactures solutions in video analytics, cloud, security cameras, video management software and hardware, and access control. Avigilon is an industry leader and, together with Motorola Solutions, provides integrated solutions for video security, access control and critical communications. Avigilon is proud to offer 24/7 technical support and complimentary software training.

FOR MORE INFORMATION,
ASKSALES@AVIGILON.COM

Visit: info.avigilon.com/education

MOTOROLA SOLUTIONS

avigilon

© 2020, Avigilon Corporation. All rights reserved. AVIGILON and the AVIGILON logo are trademarks of Avigilon Corporation. MOTOROLA,MOTO, MOTOROLA SOLUTIONS, and the Stylized M Logo are trademarks or registered trademarks of Motorola Trademark Holdings, LLC and are used under license. All other trademarks are the property of their respective owners. 03-2021

10. Certified Integrators

Motorola Solutions utilizes both local and national integrators that can provide services, support and Newport Mesa Unified. There are well over **100 Integrators** that work in Southern California. Of those integrators, the following specialize in working in education and school districts.

Blue Violet Networks	Visible Intellect
Melissa Orwig	Chad Gordon
morwig@blueviolet.net	cgordon@vissibleintellect.com
(714) 732-3207	(949) 355-2608
17815 Newhope St. Suite M	1565 Scenic Ave
Fountain Valley, CA 92708	Costa Mesa, CA 92626

Netronix	VectorUSA
Denise Read	Skyler Peterson
dread@netronixint.com	speterson@vectorusa.com
(657) 373-6265	(310) 436-1174
181 West Orangethorpe Ave, Suite E	20917 Higgins Court
Placentia, CA 92870	Torrance, CA 90501

AMS	ASSI
Anthony Bastian	Danielle Bennett
abastian@ams.net	dbennett@assisecurity.com
(925) 245-6108	(949) 955 0244
12405 East Slauson Ave, Unit K	1370 Reynolds Ave, Suite 201
Whittier, CA 90606	Irvine, CA 92614

EKC		Bearcom
Jared Dyar		Gabe Sbargli
jdyar@ekccorp.com		gabe.sbarglia@bearcom.com
(951) 376-1161		(702) 960-5579
4658 East Weathermaker		2601 Manhattan Beach Boulevard
Fresno, CA 93703		Redondo Beach CA 90278

ADT		Convergint
Corey Schultz		Eric Freking
crschultz@adt.com		eric.freking@convergint.com
(714) 317-1562		(626) 825-4561
210 W. Baywood Avenue		1983 S. Santa Cruz St
Orange, CA 92865		Anaheim, CA 92805

11. RFP Questions

SECTION 1 - TECHNICAL REQUIREMENTS

1.02 Proposed System Solution

A. The District will select a new security system to provide integrated access control, video surveillance, and alarm monitoring for the District's facilities. The District's expectations for the new security system and manufacturer include:

1. A mature, reliable, and scalable system that has been successfully deployed in multiple projects of similar size, complexity, and integration to the District.	Yes. Motorola Solutions has deployed the entire end-to-end video security and access control solution to thousands of K12 School Districts across the country.
2. A manufacturer partner with the District to support and maintain the system.	Yes. As mentioned, Motorola is unique in the industry as we do not charge for any support. As the district, you are able to call/ email/ join our support community, etc, at no additional cost.
3. Web-based applications to minimize software installation and maintenance	Yes. Avigilon has a web based Avigilon Cloud Services that can be accessed via web browser and will allow Newport Mesa Unified to install updates from a single spot while being able to access and view cameras.
4. Flexibility to support the District's varying facility types and requirements.	Yes. The entire Motorola Solutions-Avigilon platform is built with an open architecture and the ability to scale. With a wide array of camera models & access control components, Motorola Solutions has the solutions to fit Newport Mesa's needs.

5. Support for Mercury Security and other access control hardware supported by multiple system manufacturers.	Mercury Security hardware and HID VertX hardware are fully supported.
6. Product availability and support through multiple local certified integrators that can respond to calls for service in a timely manner.	Yes. Motorola-Avigilon has hundreds of installers across Southern CA. Many are located in Orange County. If Newport Mesa requires a local integrator to be on a CMAS or GSA contract, those references can also be provided.

B. Submit system narrative and manufacturer support narrative to demonstrate compliance with the District's security system goals and expectations.

With the industry's largest R&D investment and an aggressive strategy of acquisitions and partnerships, Motorola Solutions has developed an integrated portfolio of applications, devices, and services to provide vital operational intelligence for campus protection – channeling a flood of emergency data into a steady stream of safety information. All of this while maintaining an open platform for ultimate flexibility.

Avigilon (a Motorola Solutions Company) designs, develops, and manufactures solutions in video analytics, cloud, security cameras, video management software, video management hardware, and access control solutions. Avigilon is an industry leader and, together with Motorola Solutions, provides integrated solutions for video security, access control, and critical communications. With a complete end-to-end solution including, cameras, analytics, and access control, school districts are able to better manage and respond to every day events and critical situations.

Avigilon manufactures the largest array of video cameras and sensors (1MP-61MP) for any surveillance need. Our cameras are ONVIF compliant and come with built in analytics.

H6 Mini Dome Camera

The small yet mighty H6 Mini Dome offers high-quality images up to 5 MP to protect indoor spaces.

H5A Camera Line

Artificial intelligence that delivers actionable results

H5A Fisheye Camera

Cost-effective 360° coverage and no blind spots from a single vantage point

H5A-PTZ Camera

Wide area coverage, high-speed tracking and long range detail with up to 36x zoom for superior situational awareness

H5A IR PTZ Camera

See up to 300 meters in complete darkness with the Avigilon H5A IR PTZ camera. Never miss a moment at large outdoor sites with 360-degree views.

H5A Rugged PTZ Camera

No matter how tough conditions get, the extremely durable and reliable H5A Rugged PTZ camera is built to last with continuous high-resolution video

H5A Corner Camera

Anti-ligature, no-grip and IK10+ impact-rated solution that can handle the harshest attempts to destroy, detach, attach to or disable it

H5A Dual Head Camera

Cost-effective and low profile dual-sensor camera that increases coverage, minimizes blind spots, and offers Next-Generation Video Analytic capabilities.

H5A Modular Camera

The smallest Avigilon camera is designed for areas with limited space or that require a discreet monitoring solution.

H5SL Camera Line

Versatile, cost-effective and backed by an industry-leading warranty

H5M Camera Line

Artificial intelligence that delivers actionable results

H5 Pro Camera Line

High resolution camera for maximum scene coverage

H4 Multisensor Camera

Up to 360-degree coverage with self-learning video analytics

H4 Thermal Camera

Exceptional detection even in absolute darkness or partly camouflaged scenes

H4 Thermal Elevated Temperature Detection

High-throughput, contactless pre-screening to detect elevated skin temperatures

H4 Video Intercom

Remotely identify, communicate and authorize access

Avigilon Control Center (ACC) 7 is the latest and most advanced version of ACC™ video management software. Designed to bring the right information to you so that you can take action, ACC 7 provides an easy-to-use, AI-enabled user interface to help ensure critical events do not go unnoticed.If Newport Mesa has existing ONVIF compliant cameras they'd like to utilize, they are able to utilize those in ACC. Through the use of AI NVR's and/ or AI Appliances, Avigilon's industry leading analytics can be added to existing ONVIF compliant cameras.

CLASSIFIED OBJECT DETECTION
Detects and classifies people or vehicles to help operators verify and respond faster. Next-generation analytics provide improved object classification.

AVIGILON APPEARANCE SEARCH™ SUPPORT
Quickly locates a specific person or vehicle of interest across an entire site using a sophisticated deep learning AI search engine.

FACE RECOGNITION
Detects matches from managed watchlists to alert operators of people of interest. Requires Appearance Search and an additional license.

NO FACE MASK DETECTION
To help prevent community transmission, this feature determines whether a person is not wearing a face mask. Immediate notifications in the Focus of Attention interface coupled with detailed reporting in Avigilon Cloud Services provides notification on non-compliance.

OCCUPANCY COUNTING
By placing cameras at exits and entrances, a running total of occupancy can be monitored in real time. You can get an overview of occupancy for up to 30 days using the Avigilon Cloud Services Reports tab.

LICENSE PLATE RECOGNITION
Automatically reads license plate information from vehicles, linking it to live and recorded video. This enables security operators to search and quickly find specific captured license plate video for verification and investigation.

ACC software unifies with your Access Control Manager™ system seamlessly, allowing you to verify the identity of the person attempting to access a door connected to a camera, quickly search for a person using their cardholder information and view video clips of related door activity.

Motorola Solutions Access Control Manager (ACM) is an on-premise access control system for enterprise-class installations, protecting people, properties and assets. This 100% browser-based and mobile-enabled solution offers the flexibility to respond to alerts from anywhere and at any time for better situational awareness and superior control of access to facilities. Designed to be quickly deployed and easy to use, ACM™ provides operators with an intuitive turnkey solution so they can focus on what matters most - security.

UNIFIED ACCESS CONTROL & VIDEO
Review and verify automated alarms generated by ACM with the associated live or recorded video in ACC™ for quicker responses.

OPEN-FIELD HARDWARE SUPPORT
Future-proof your facility with open-platform hardware from leading manufacturers, including readers, wireless locks, controllers & sub-panels, power supplies & enclosures and more.

IDENTITY MANAGEMENT
Assign and manage role-based identities and display user ID profile pictures with access control events and alarms. Print employee and visitor badges and issue mobile credentials directly from within ACM.

ALARM MANAGEMENT
Prioritize alarms with audible alerts and colored indicators. View associated video, enter notes and acknowledge and clear alarms in one place.

FLEXIBLE INTEGRATIONS
The RESTful API enables ACM to integrate with a vast range of devices and solutions to uniquely fit your needs and provide you with an end-to-end security solution.

MOBILE-ENABLED SOLUTION
Lock and unlock doors, view their real-time status and issue global actions with a simple tap with ACM Expedite mobile app. Extend access control to doorless locations with ACM Verify virtual stations.

REPLICATION & HOT STANDBY AUTO FAILOVER
Streamline identity management by replicating data on multiple ACM appliances across sites. Maximize system uptime with hot standby-auto failover to maintain multiple layers of redundancy and resiliency.

MAPS
View and manage all security objects, including identity, doors and alarms.

Avigilon Access Control Manager (ACM) integrates with all leading intrusion detection manufacturers. Different integration pathways are available, depending on the manufacturer of the intrusion system. Examples of intrusion detection system integrations include:

Intrusion

PRODUCT INFORMATION	INTEGRATION INFORMATION
Bosch Bosch Intrusion Fully integrated intrusion, fire, and access control allows users to interface with one system instead of three.	Allows ACM to monitor Intrusion events from a single location, Arm, Disarm intrusion panels by area, and monitor the health of intrusion panels. WORKS WITH: ACM System

BOSCH VERSION	MOTOROLA SOLUTIONS VERSION	CONTACT
Mid-range: B3512, B4512, B5512, B6512	5.8.2 and newer	Avigilon
Commercial: B8512G, B9512G	5.8.2 and newer	Avigilon

PRODUCT INFORMATION	INTEGRATION INFORMATION
DMP DMP Intrusion Fully scalable and flexible panels that connect to IP networks, removing the need for additional access hardware or wiring. Operators can monitor and control the DMP panels directly within ACM, allowing operators to detect intrusion events from a single location for increased security.	**WORKS WITH:** ACM System Monitor intrusion objects such as panels, zones and areas, and quickly identify those requiring attention with easy-to-use filters. Easily control DMP objects remotely, arm or disarm an area, or silence an alarm directly from ACM. This integration also allows for workflow automation by using access control events to trigger intrusion commands automatically. Benefit from increased situational awareness and improved accuracy with visual verification of alerts.

Through utilizing Motorola Solutions ,Newport Mesa Unified will achieve its goal in a fully integrated security system.

1.03 Software and License Pricing

A. The District has developed the following criteria to demonstrate the anticipated security system size and capacities.

1. Simultaneous Users: 40
2. Workstation Locations: 50
3. Badge Enrollment Workstations (including portrait camera, flash, backdrop, and badge printer): 1
4. Video Recorders: 30 (1 per facility)

B. Provide Active Directory integration to populate employee user and cardholder information in the security system.

Yes. Avigilon Access Control Manager has the ability to utilize Active Directory to populate user and cardholder information and assign access.

C. Submit proposed manufacturer pricing as follows based on the anticipated system Capacities.

The pricing for the anticipated system can be found in Section 8 under itemized pricing proposal. Motorola does not sell directly to end users nor do we quote final pricing. As mentioned, the pricing is shown at MSRP without integrator discounts and/or costs for installation. Three (3) integrators have been selected to show their pricing in Section 14 for the district's reference. As mentioned, Motorola Solutions will work closely with NMUSD to find the best integrator to maintain the best service and fair pricing for all materials and installation.

1. Unit prices and quantities for system software and licenses.	2. Badge enrollment workstation including the following: a. Workstation software and licenses. b. Portrait camera with direct controls from workstation, tripod, and flash unit. c. Portrait backdrop. d. Fargo DTC5000 or equal badge printer with simultaneous dual sided, over-the-edge printing and printer cleaning kit. e. Printer materials to print 2,000 badges.	3. Software and licenses to support the anticipated facility equipment as indicated in the attached Security System Quantities Summary. The summary indicates the types of facilities and the quantity of each, card readers, cameras, intrusion panels, and security equipment locations (where access control equipment will be located).	4. Total cost to implement the anticipated system. The total cost shall not include off- the-shelf hardware such as servers, workstation computers, monitors, and other equipment that can be purchased by the District, through typical technology Contracts.
5. Unit prices to add software licenses and capacity after the initial purchase where different from proposed initial system prices (e.g., escalation, renewal, etc.).	6. Unit prices for each manufacturer-provided Mercury access control hardware Element.	7. Unit prices for each hardware element necessary to implement the system that must be purchased from the manufacturer.	8. Unit prices for other hardware and equipment that can be purchased through the manufacturer (e.g., card readers, access cards, printers, etc.).

avigilon™
a Motorola Solutions Company

Project Name
Newport Mesa

Date 11/11/2022
Quotation # 57832453288

Quotation For

Prepared by: Phillip Koken

Comments or Special Instructions

Quotation is valid for a period of thirty (30) days from the above date

QTY	Model Name	Description	MSRP	Line Total
1	AC-APP-128R-ENT2-6	Access Control Manager Enterprise 6 – Enterprise Appliance for 128 Readers	$ 10,368.30	$ 10,368.30
1	AC-SW-LIC-BDGE-6-P	Access Control Manager 6 Badging Software Licenses	$ 909.14	$ 909.14
1	AC-SW-LIC-LDAP-6-P	Access Control Manager 6 LDAP Directory Connectivity Software License	$ 2,728.50	$ 2,728.50
3	AC-SW-LIC-BOSCHINTR-10PANEL-6-P	Access Control Manager 6 Bosch Integration Software Licenses	$ 3,274.20	$ 9,822.60
4	AC-MER-CONT-LP1502	Intelligent Controller (Mercury Part #: LP1502)	$ 1,480.69	$ 5,922.76
62	AC-MER-CON-MR52-S3B	Series 3B Two-Reader Interface Module (Mercury Part #: MR52-S3B)	$ 856.18	$ 53,083.16
2	AC-LSP-4DR-MER-LCK	Lifesafety Power Four Door Mercury Dual Voltage Integrated Power System	$ 693.78	$ 1,387.56
3	AC-LSP-8DR-MER-LCK	Lifesafety Power Eight Door Mercury Dual Voltage Integrated Power System	$ 948.78	$ 2,846.34
7	AC-LSP-16DR-MER-LCK	Lifesafety Power Sixteen Door Mercury Dual Voltage Integrated Power System	$ 1,516.23	$ 10,613.61
130	AC-HID-READER-SIGNO-40NKS-T1-000000	HID 40NKS-T1-000000	$ 302.03	$ 39,263.90
1	AC-SW-LIC-16RCU-6-P	Access Control Manager 6 Sixteen Doors Expansion Software Licenses	$ 909.14	$ 909.14
		0	$ -	$ -
		0	$ -	$ -
		0	$ -	$ -
			Subtotal	$ 137,855.01
			Total USD	$ 137,855.01

Thank you for your business!

Integrator is responsible for accuracy in Counts, Design, Functionality, and Implementation

Equipment listed above is not a reflection of a complete, functioning system.

1.04 Integrators

A. The number and quality of integrators that can support the manufacturer's product for the District will be evaluated.

B. Submit a list of certified integrators that can provide services and support to the District. Include contact information and address for each.

Motorola utilizes both local and national integrators that can provide services, support and Newport Mesa Unified. There are well over **100 Integrators** that work in Southern California. Of those integrators, the following specialize in working in education and school districts. More references and integrators can be provided at the district's request.

Blue Violet Networks		Visible Intellect
Melissa Orwig		Chad Gordon
morwig@blueviolet.net		cgordon@vissibleintellect.com
(714) 732-3207		(949) 355-2608
17815 Newhope St. Suite M		1565 Scenic Ave
Fountain Valley, CA 92708		Costa Mesa, CA 92626
Netronix		**VectorUSA**
Denise Read		Skyler Peterson
dread@netronixint.com		speterson@vectorusa.com
(657) 373-6265		(310) 436-1174
181 West Orangethorpe Ave, Suite E		20917 Higgins Court
Placentia, CA 92870		Torrance, CA 90501
AMS		**ASSI**
Anthony Bastian		Danielle Bennett
abastian@ams.net		dbennett@assisecurity.com
(925) 245-6108		(949) 955 0244
12405 East Slauson Ave, Unit K		1370 Reynolds Ave, Suite 201

Whittier, CA 90606		Irvine, CA 92614
EKC		**Bearcom**
Jared Dyar		Gabe Sbarglia
jdyar@ekccorp.com		gabe.sbarglia@bearcom.com
(951) 376-1161		(702) 960-5579
4658 East Weathermaker		2601 Manhattan Beach Boulevard
Fresno, CA 93703		Redondo Beach CA 90278

ADT		**Convergint**
Corey Schultz		Eric Freking
crschultz@adt.com		eric.freking@convergint.com
(714) 317-1562		(626) 825-4561
210 W. Baywood Avenue		1983 S. Santa Cruz St
Orange, CA 92865		Anaheim, CA 92805

1.05 Support to the District

A. Direct manufacturer support is essential to the District. The District will train and certify their personnel who will service and support the security system.

B. Submit proposed manufacturer pricing to support the District's maintenance staff as follows.

1. Annual software support and maintenance agreement to provide direct support to the district. Provide costs for a minimum of five years.	Unique to the industry, Motorola-Avigilon does not charge for any ongoing support for the district. Newport Mesa Unified may call or email the manufacturer directly at no additional cost
2. Training and certification for installation and maintenance technicians.	Training and certification via online portals are included for installation and maintenance technicians. Should NMUSD

	require more enhanced/customized training and/or certification, Avigilon offers professional services at an additional cost for staff. These costs vary from in-person to remote packages.
3. Training and certification for system administrator and configurator staff.	All users are able to access Avigilon's online certification courses at no cost to the district. These virtual courses allow the user to learn individual features and functions of the ACC & ACM system.
4. Training and certification for system operators.	All users are able to access Avigilon's online certification courses at no cost to the district. These virtual courses allow the user to learn individual features and functions of the ACC & ACM system.
5. Include individual and group package pricing for each of these programs as applicable.	Motorola offers Professional Services through our Certified Partners to provide services that are often beyond the scope of the system's initial deployment. Motorola's own highly trained professionals can be deployed remotely or on-site to provide Audit Services, Configuration Services, Network Services and System Troubleshooting. These engagements are customized for each client with a detailed SOW (Scope-of-Work) to solve a specific need. SOW details and pricing are customized for each request. Example of Motorola Professional Services include: ● Auditing the site annually to verify video resolution, frame rate and retention time meet specific compliance requirements.

	● Installation and configuration of the users own Security Certificates to encrypt network traffic. ● Troubleshoot configurations of 3rd party networking devices including switches, routers and firewalls. ● Review and optimize video analytics to reduce false alarms and improve operational performance.

Support to Newport Mesa Unified:

Avigilon's Technical Support team can assist with any challenges that may arise during the day-to-day operation of the system: 24 hours a day, 7 days per week, 365 days a year. Again, there is no additional cost for Newport Mesa Unified or integrators to reach out to technical support or utilize Avigilon's support.

Avigilon's support can be utilized by dialing the support line (1-888-281-5182) and choosing Option 9, calls are automatically routed directly to the on-call Specialist's mobile number on the weekends. If the call is not immediately answered, the standard response is within 30 minutes.

System troubleshooting and resolution can be performed remotely for any Avigilon product, assuming remote connectivity is permitted by the end user (Newport Mesa Unified)

All cases are tracked and managed in a system which is actively monitored to ensure high quality response. Case numbers are assigned for easy reference for individual issues. Technical Support acts as the main point of contact so that the customer is not being forwarded or transferred to other departments.

If an issue requires escalation to the Engineering team, Technical Support acts as a liaison on behalf of the customer/NMUSD, and works with them for an efficient resolution. In addition, and for cases with unique circumstances, the Tech Support team not only engages Engineering, but also the product development team.

Support can be obtained via several methods, depending on preference:

- By phone 1-888-281-5182, All international numbers available at http://avigilon.com/contact-us
- Online form http://avigilon.com/contact-us/
- Email: response within 4-12 hours
- Self-service through the Avigilon Resource Center (online partner portal)
- Chat support: Available via Avigilon's website (see link and snapshot image below): http://avigilon.com/contact-us/

1.06 Video System Integration

A. Include in the system narrative a detailed explanation of video system integration with access control and intrusion detection functions. Provide details for the following:

1. Integrated video system manufacturer.	The video solution hardware (Avigilon) is all part of the Motorola portfolio. The cameras, servers, AI Appliances, etc. are all manufactured by Motorola Solutions in North America.
2. Relationship between the manufacturers.	Avigilon is a company owned by Motorola Solutions.
3. Manufacturer roles and responsibilities including integration support.	24/7 technical support and assistance are provided by Motorola. Newport Mesa Unified can call without any support agreements. Integration support won't be needed as the video system will be integrated
4. Integrated user interface and system functions available through the integrated user interface.	Because Avigilon is the manufacturer, for the video system, cameras, software and analytics, all functionality will be available within Avigilon Control Center

B. Provide software, licenses, professional services, and other costs necessary to implement the video system integration.

Confidential
Date: 2022-11-01
Quote #: Q-883375
Quote Name: Newport Mesa Unified Initial BOM
Prepared By: Daniel Dukes
Prepared For:

avigilon™

Bill To:
Newport Mesa Unified School District
2985 Bear Street
Costa Mesa, CA, 92626
United States

Ship To:

STORAGE				
MODEL NUMBER	**DESCRIPTION**	**QTY**	**NET UNIT PRICE**	**LINE TOTAL**
AINVR-STD-24TB-NA	AI NVR Standard, 24TB, NA	30.00	$17,434.92	$523,047.60

CAMERA				
MODEL NUMBER	**DESCRIPTION**	**QTY**	**NET UNIT PRICE**	**LINE TOTAL**
4.0C-H5A-DO1-IR	4.0 MP WDR, LightCatcher, Day/Night, Outdoor Dome, 3.3-9mm f/1.3 P-iris lens, Integrated IR, Next-Generation Analytics	346.00	$1,347.77	$466,328.42
20C-H4A-4MH-360	4x 5 MP, WDR, LightCatcher, 2.8mm, Camera Only	60.00	$2,478.05	$148,683.00

SOFTWARE				
MODEL NUMBER	**DESCRIPTION**	**QTY**	**NET UNIT PRICE**	**LINE TOTAL**
ACC7-ENT	ACC 7 Enterprise camera channel	406.00	$316.51	$128,503.06
ACC-ENT-SMART-1YR	ACC Enterprise Smart Plan, 1 year	406.00	$32.10	$13,032.60

ACCESSORIES				
MODEL NUMBER	**DESCRIPTION**	**QTY**	**NET UNIT PRICE**	**LINE TOTAL**
H4AMH-AD-PEND1	Outdoor pendant mount adapter, must order one of IRPTZ-MNT-Wall1 or IRPTZ-MNT-NPTA1 and one of H4AMH-DO-COVR1 or H4AMH-DO-COVR1-SMOKE.	60.00	$188.80	$11,328.00
H4AMH-DO-COVR1	Outdoor Dome Cover for H4 Multisensor	60.00	$188.80	$11,328.00
IRPTZ-MNT-WALL1	Pedant w/Video mount adapter. For use with H4 IR PTZ or H4A-MH-AD-PEND1 on H4 Multisensor.	60.00	$112.11	$6,726.60
H4AMH-AD-IRIL1	Optional IR illuminator ring, up to 30m (100ft), for use with H4AMH-DO-COVR1.	60.00	$389.40	$23,364.00

NETWORKING				
MODEL NUMBER	**DESCRIPTION**	**QTY**	**NET UNIT PRICE**	**LINE TOTAL**
POE-INJ2-60W-NA	Indoor single port Gigabit PoE++ 60W, North American power cord included. May also be used in European Union, Japan, Australia, New Zealand, Mexico, China, South Korea, Russia, Argentina, Saudi Arabia, Kuwait, UAE and Brazil. Temperature range of the PoE injector is -10C to +45C (14 °F to 113 °F). When used with the H4 IR PTZ, the camera will operate in a reduced temperature range from -10 °C to +50 °C (14 °F to 122 °F).	60.00	$177.00	$10,620.00
SM24TAT2SA-NA	24-Port Gigabit Managed Switch (24) PoE+ budget 370W, (2) SFP - NA	17.00	$1,605.90	$27,300.30

Currency	USD
MSRP Subtotal	$1,370,261.58
Estimated Shipping & Handling	Not Included
Estimated Tax	Not Included
Total	**$1,370,261.58**

SALES | +1.604.629.5182 | sales@avigilon.com TECHNICAL SUPPORT | +1.888.281.5182 | support@avigilon.com
© 2022, Avigilon Corporation. All rights reserved. AVIGILON and the AVIGILON logo are trademarks of Avigilon

1.07 Video Analytics

A. Include in the system narrative a detailed explanation of video analytics supported by the system. Provide details for the following:

1. Video analytics integrated into the video surveillance system.	Under Motorola's portfolio, Avigilon will be the integrated analytics in the video surveillance system. The aforementioned cameras will have the analytics built in. Newport Mesa can still use existing ONVIF compliant cameras and add Avigilon's analytics to those cameras through the use of an AI Appliance or AI NVR.
2. Partner manufacturers providing video analytics.	Avigilon's end-to-end solution includes analytics that are built into the cameras and VMS.
3. Key video analytics provided through partner manufacturers.	**Appearance Search** - Avigilon Appearance Search™ video analytics technology is a sophisticated deep learning AI search engine for video. It sorts through hours of video with ease, to quickly locate a specific person or vehicle of interest by entering physical descriptions, uploading a photo, or by finding an example within recorded video. Appearance Search can improve incident response time and enhance forensic investigations by helping operators compile robust video evidence, create a powerful narrative of events, and reveal a vehicle or individual's route or last-known location. **UAD -** Unusual Activity Detection (UAD) provides new edge-based intelligence that uses advanced AI technology. It is designed to enable the detection of atypical activities, such as people and vehicles traveling at faster speeds or are in unusual locations and alert operators. **Rules -** line crossing, object loitering, object counting

	Motion detection and Focus of Attention capabilities – Monitor low-traffic areas for intrusion and immediately capture information about possible threats. **Appearance and identity search** – Organize event responses more quickly, sorting through video records to locate footage of known threats. **Video analytics** – Scan the campus in real time for evidence of developing incidents. **Elevated temperature detection** - Locate individuals with symptoms of an illness to screen entry and avoid outbreaks.
4.Operational differences of partner manufacturers versus integrated video analytics.	Avigilon's analytic cameras come equipped with the above analytic and search capabilities mentioned out of the box. Should NMUSD require the use of 3rd party, ONVIF compliant cameras, Avigilon analytics can be added to those 3rd party, ONVIF compliant cameras through the use of an AI appliance or AI NVR. This will give 3rd party cameras the ability to perform advanced analytic features such as the unusual motion detection, appearance search, LPR search, and much more.
5. Integration of partner manufacturer video analytics into the user interface.	The Avigilon Control Center user interface shows the classified object analytic detection by outlining the detected person or vehicle using bounding boxes. In instances of unusual motion the bounding boxes will change to a yellow hue to distinguish the object in question. If a rule, such as a line-crossing event, is detected the software will show an alarm pop-up indicating that an exception has been triggered by a classified object.

B. Included in the itemized pricing a detailed unit price list for video analytics. Include the following:

1. Integrated video analytics licenses and licensing scheme.	The video management system (including all of the analytics and licenses) are all designed and owned by Avigilon, a Motorola Solutions company. The analytics are built into any Avigilon analytic camera and ready to use out of the box. Should NMUSD require the use of 3rd party, ONVIF compliant cameras, Avigilon analytics can be added to those 3rd party, ONVIF compliant cameras through the use of an AI appliance or AI NVR. Licenses are required on a per-camera basis. If a camera has multiple lenses (i.e. Avigilon 4 camera multisensor), this will count as one license.
2. Primary partner video analytics licenses and licensing scheme.	Avigilon is a company owned by Motorola Solutions.
3. Optionally, provide secondary partner video analytics licenses and licensing Schemes.	Through the use of Avigilon, NMUSD should not require additional secondary analytics. However, because of the open nature of Avigilon's architecture, additional analytics may be added through API's or other integrations.

Confidential
Date: 2022-11-01
Quote #: Q-883375
Quote Name: Newport Mesa Unified Initial BOM
Prepared By: Daniel Dukes
Prepared For:

avigilon™

Bill To:
Newport Mesa Unified School District
2985 Bear Street
Costa Mesa, CA, 92626
United States

Ship To:

STORAGE				
MODEL NUMBER	**DESCRIPTION**	**QTY**	**NET UNIT PRICE**	**LINE TOTAL**
AINVR-STD-24TB-NA	AI NVR Standard, 24TB, NA	30.00	$17,434.92	$523,047.60

CAMERA				
MODEL NUMBER	**DESCRIPTION**	**QTY**	**NET UNIT PRICE**	**LINE TOTAL**
4.0C-H5A-DO1-IR	4.0 MP WDR, LightCatcher, Day/Night, Outdoor Dome, 3.3-9mm f/1.3 P-iris lens, Integrated IR, Next-Generation Analytics	346.00	$1,347.77	$466,328.42
20C-H4A-4MH-360	4x 5 MP, WDR, LightCatcher, 2.8mm, Camera Only	60.00	$2,478.05	$148,683.00

SOFTWARE				
MODEL NUMBER	**DESCRIPTION**	**QTY**	**NET UNIT PRICE**	**LINE TOTAL**
ACC7-ENT	ACC 7 Enterprise camera channel	406.00	$316.51	$128,503.06
ACC-ENT-SMART-1YR	ACC Enterprise Smart Plan, 1 year	406.00	$32.10	$13,032.60

ACCESSORIES				
MODEL NUMBER	**DESCRIPTION**	**QTY**	**NET UNIT PRICE**	**LINE TOTAL**
H4AMH-AD-PEND1	Outdoor pendant mount adapter, must order one of IRPTZ-MNT-Wall1 or IRPTZ-MNT-NPTA1 and one of H4AMH-DO-COVR1 or H4AMH-DO-COVR1-SMOKE.	60.00	$188.80	$11,328.00
H4AMH-DO-COVR1	Outdoor Dome Cover for H4 Multisensor	60.00	$188.80	$11,328.00
IRPTZ-MNT-WALL1	Pedant w/Video mount adapter. For use with H4 IR PTZ or H4A-MH-AD-PEND1 on H4 Multisensor.	60.00	$112.11	$6,726.60
H4AMH-AD-IRIL1	Optional IR illuminator ring, up to 30m (100ft), for use with H4AMH-DO-COVR1.	60.00	$389.40	$23,364.00

NETWORKING				
MODEL NUMBER	**DESCRIPTION**	**QTY**	**NET UNIT PRICE**	**LINE TOTAL**
POE-INJ2-60W-NA	Indoor single port Gigabit PoE++ 60W, North American power cord included. May also be used in European Union, Japan, Australia, New Zealand, Mexico, China, South Korea, Russia, Argentina, Saudi Arabia, Kuwait, UAE and Brazil. Temperature range of the PoE injector is -10C to +45C (14 °F to 113 °F). When used with the H4 IR PTZ, the camera will operate in a reduced temperature range from -10 °C to +50 °C (14 °F to 122 °F).	60.00	$177.00	$10,620.00
SM24TAT2SA-NA	24-Port Gigabit Managed Switch (24) PoE+ budget 370W, (2) SFP - NA	17.00	$1,605.90	$27,300.30

Currency	USD
MSRP Subtotal	$1,370,261.58
Estimated Shipping & Handling	Not Included
Estimated Tax	Not Included
Total	**$1,370,261.58**

© 2022, Avigilon Corporation. All rights reserved. AVIGILON and the AVIGILON logo are trademarks of Avigilon

1.08 Intrusion Detection Integration

A. Include in the system narrative a detailed explanation of intrusion detection system integration with access control and video surveillance functions. Provide details for the following:

1. Integrated intrusion detection system manufacturer.	Avigilon Access Control Manager (ACM) integrates with all leading intrusion detection manufacturers. Different integration pathways are available, depending on the manufacturer of the intrusion system..
2. Relationship between the manufacturers.	Avigilon has software and hardware integrations with multiple intrusion detection manufacturers. Avigilon does not manufacture Intrusion Detection systems.
3. Manufacturer roles and responsibilities including integration support.	Avigilon provides support to integrate with intrusion detection manufacturers.
4. Integrated user interface and system functions available through the integrated user interface.	This is dependent on the manufacturer of intrusion equipment and customer requirements.

B. Provide software, licenses, professional services, and other costs necessary to implement the intrusion detection system integration.

There are no software licensing costs to integrate with Honeywell. After a proper site walk, a full determination on licensing costs can be calculated for integration based on the intrusion detection the manufacturer utilizes.

12. Similar Deployment

The Motorola Solutions Ecosystem is utilized by thousands of school districts across the country. In the supplemental documents, a full case study of Fulton County Schools' (GA) security system in attached in Section 14

Fulton County Schools	
Number of Students	90300
Number of Schools	110
Contact Name	Paul Hildreth
Phone Number	(470) 254-0307
Email	hildreth@fultonschools.org

In CA, there are many districts also utilizing Motorola Solutions. Below are a select few around the Orange County/ Los Angeles area. These districts have diverse student and staff populations throughout southern CA and provide great examples of how Newport Mesa Unified may utilize Motorola's proactive analytics and end to end ecosystem.

Irvine Unified	
Number of Students	35,660
Number of Schools	44
Contact Name	Don Grudem
Title	Supervisor, Campus Security
Phone Number	(949) 936-5350
Email	dongrudem@iusd.org

Fullerton Elementary	
Number of Students	12,141
Number of Schools	20
Contact Name	Joshua Holmes
Title	Director of Technology
Phone Number	(714) 447-7483
Email	joshua_holmes@myfsd.org

Paramount Unified	
Number of Students	13,761
Number of Schools	19
Contact Name	Jessie Flores
Title	Director, Campus Security
Phone Number	(562) 602-8088
Email	jeflores@paramoun.k12.ca.us

Val Verde Unified	
Number of Students	19,303
Number of Schools	23
Contact Name	Mark Clark
Title	Police Chief
Phone Number	(951) 940-6100 Ext. 10671
Email	mclark@valverde.edu

14. Supplemental data as desired by the Respondent to supplement the RFP response.

Fulton County Schools Case Study

PRIORITIZING SAFETY AT FULTON COUNTY SCHOOLS

Founded in 1871, Fulton County Schools (FCS) is the fourth largest school district in Georgia, United States. It consists of 106 schools and administrative support buildings, including 59 elementary schools, 19 middle schools, 18 high schools, and ten charter organizations with multiple campuses. Its mission is to provide a safe and secure environment for more than 93,000 students and more than 14,000 full-time employees.

FCS is a great example of the Motorola Solutions Safe Schools technology ecosystem in action; its security system consists of Avigilon video security solutions and Access Control Manager (ACM), and the school safety team and police department use Motorola Solutions APX™ P25 two-way radios to stay connected and keep students and personnel safe.

To ensure that situational awareness is present across all its campuses, FCS installed Avigilon video security cameras with self-learning video analytics and Next-Generation Video Analytics, Avigilon network video recorders, and Avigilon Control Center (ACC) video management software with Avigilon Appearance Search™ technology. FCS also deployed an Access Control Manager™ system to secure physical access points in its administrative buildings, which is seamlessly unified with ACC™ to incorporate a video component to access control alarms for easy verification of individuals at entry and exit points.

In addition to replacing their analog cameras with an end-to-end video security system, FCS also deployed analytics-enabled video security cameras to enable proactive event responses and enable themselves to record, capture, and share clear security video with its school board, police, and the concerned public.

UPGRADING AN OBSOLETE VIDEO SECURITY SYSTEM TO BETTER PROTECT STAFF AND STUDENTS

Securing more than 100 buildings is no easy feat, but it's of utmost importance to the Department of Safety and Security at Fulton, which also includes the School Police and Student Health Services and Emergency. With above-average student

> "One of the biggest security challenges we face is our ability to reliably monitor important areas throughout our schools, especially during an emergency. Our Avigilon system not only provides exceptional image quality, but advanced video analytics like Avigilon Appearance Search technology as well, and that saves us valuable time and effort — ultimately making our schools a safer place."

MOTOROLA SOLUTIONS

FAST SEARCH FOR FASTER RESPONSE

FCS installed Avigilon analytics-enabled video security cameras with self-learning video analytics in over 100 schools. The cameras are managed by ACC software, which features Appearance Search technology. FCS uses Appearance Search to sort through hours of recorded video as easily as searching the internet by allowing their team to find specific individuals or vehicles based on simple physical descriptors, such as gender, age category, clothing color, vehicle type, or vehicle color.

FCS security operators have used Appearance Search to quickly and efficiently search for all instances of a person or vehicle across all cameras on its various sites when responding to a potentially critical event. This has saved time and effort during investigations by helping them track the route of a person or vehicle and identifying their previous and last-known locations.

"We chose Avigilon because of the capabilities it offers in its advanced video analytics and AI-powered search technologies, including Avigilon Appearance Search," said Mr. Hildreth. "Their analytics are easy to set up and use, and can save us valuable time and effort, ultimately making our schools a safer place for generations to come."

THE RESULTS: EXCEPTIONAL IMAGE QUALITY AND EFFECTIVE VIDEO SECURITY

Before switching to the Avigilon solution, the district was challenged with low system reliability, which resulted in not having video evidence when needed. Furthermore, in situations where there was recorded video, it was not of high enough quality to provide value.

Upgrading the district's security solutions began with a single high school as a pilot program. With the installation of a Motorola Solutions technology ecosystem, FCS has benefited from AI-powered solutions that help their team maximize its efficiency so that they can focus on protecting what matters most — students, staff, and faculty. The success of this replacement led the district to integrate ACC software in other school projects and when FCS opened new administrative centers with both ACM and Avigilon video security solutions deployed.

The continued expansion of the system will provide the district with crucial and powerful insights that can help save time and effort during critical investigations while offering new features to respond to emerging security challenges, such as health safety. With the help of Motorola Solutions and Avigilon, the future looks bright for Fulton County Schools.

EXPANDING SITUATIONAL AWARENESS

One of the most valuable aspects of a school security system is its ability to enhance situational awareness. For greater awareness of events happening on school grounds, FCS set up Avigilon Multisensor cameras to capture challenging angles and provide total coverage within a 180 to 360-degree area.

Visit: **info.avigilon.com/education**

MOTOROLA SOLUTIONS

This effort was further supported by Avigilon self-learning video analytics which over time learns typical patterns in a scene so that it can immediately and accurately alert security operators to scene anomalies so that they can review and respond accordingly.

PROTECTING STUDENTS DURING A GLOBAL PANDEMIC

When faced with the unexpected rise of the COVID-19 pandemic, FCS was quick to respond to keep its students and staff safe. With ACC's No Face Mask Detection technology, security operators receive alerts when the system detects individuals both in and around its schools who are not complying with face mask-wearing protocols and can quickly use their Motorola Solutions radios to communicate with nearby members of the school safety team who can address the behavior instantaneously.

By using a video security system, administrators have evidence of incidents that allows them to address the behavior with no argument, and as a result, they have found that they rarely need to issue more than one correction. The feature can also be conveniently turned off in areas where students are permitted to take off their face masks, such as the cafeteria. Implementing a leading security system has allowed FCS to respond quickly to its changing security needs — no matter how unexpected or profound those changes are.

> "We've found that the simple fact that our system has No Face Mask Detection makes individuals more likely to comply with the rules," said Mr. Hildreth. "Our goal is to keep students both safe and in school, and the quick development of this new Avigilon analytic technology by Motorola Solutions addressed our needs quickly and effectively."

Motorola Solutions, Inc. 500 West Monroe Street, Chicago, IL 60661 U.S.A. **motorolasolutions.com**

MOTOROLA, MOTO, MOTOROLA SOLUTIONS and the Stylized M Logo are trademarks or registered trademarks of Motorola Trademark Holdings, LLC and are used under license. All other trademarks are the property of their respective owners. © 2022 Motorola Solutions, Inc. All rights reserved. 04-2022 [BG02]

Visible Intellect Estimated Pricing (Installation estimate included-not final)

VISIBLE INTELLECT

PRICING

07

PROJECT PRICING ANALYSIS

Manufacturer	Equipment Model No.	Description	MSRP	PRICE	QTY	EXTENDED TOTAL
	Licensing					
Avigilon	ACC7-ENT	ACC 7 Enterprise license for up to 1 camera channels	$316.51	$246.88	406	$100,232.39
Avigilon	ACC-ENT-SMART-1YR	ACC Enterprise Smart Plan, 1 year	$32.10	$25.04	406	$10,165.43
	Network Video Recorder					
Avigilon	VMA-AS3-24P24-NA	HD Video Appliance Pro 24-Port 24TB	$11,411.50	$8,900.97	30	$267,029.10
Avigilon	VMA-AS3-ANK	Analytics Kit for Appearance Search and Face Recognition	$1,156.42	$902.01	30	$27,060.23
	Cameras					
Avigilon	4.0C-H5A-DO1-IR	4MP Outdoor Dome, Infrared	$1,347.77	$1,051.26	346	$363,736.17
	Multisensor Cameras					
Avigilon	24C-H4A-3MH-180	3x 8 MP, WDR, LightCatcher Camera Only	$2,478.05	$1,932.88	60	$115,972.74
	Mounting Adapters and Dome Covers					
Avigilon	H4AMH-AD-IRIL1	IR illuminator ring, up to 30m (100ft), for use with H*AMH—DO—	$389.40	$303.73	60	$18,223.92
Avigilon	POE-INJ2-60W-NA	60W PoE Injector for IR ring	$177.00	$138.06	60	$8,283.60
Avigilon	H4AMH-AD-PEND1	H* Multisensor pendant	$188.80	$147.26	60	$8,835.84
Avigilon	IRPTZ-MNT-WALL1	Pendant wall arm adapter, for use with H*AMH AD PEND1 or H* IRPTZ	$112.11	$87.45	60	$5,246.75
Avigilon	H4AMH-DO-COVR1	Dome bubble cover	$188.80	$147.26	60	$8,835.84
	Access Control Panels, Power Supplies, Licensing					
Avigilon	AC-APP-128R-ENT2-6	Access Control Manager Enterprise 6 – Appliance for 128 readers	$10,368.30	$8,087.27	1	$8,087.27
Avigilon	AC-SW-LIC-16RCU-6-P	Access Control Manager 6 Sixteen Doors Expansion	$909.14	$709.13	1	$709.13
Avigilon	AC-SW-LIC-LDAP-6-P	Access Control Manager 6 LDAP Directory	$2,728.50	$2,128.23	1	$2,128.23
Avigilon	AC-SW-BDGE-6-P	Badging Software Option	$909.14	$709.13	1	$709.13
Avigilon	AC-SW-LIC-BOSCHINTR-10PANEL-6-P	Access Control Manager 6 Bosch Integration Software Licenses	$3,274.20	$2,553.88	3	$7,661.63
Avigilon	AC-LSP-16DR-MER-LCK	Panel Enclosure & Power Supply - 16 Reader	$1,516.23	$1,182.66	7	$8,278.62
Avigilon	AC-LSP-8DR-MER-LCK	Panel Enclosure & Power Supply - 8 Reader	$948.78	$740.05	3	$2,220.15
Avigilon	AC-LSP-4DR-MER-LCK	Panel Enclosure & Power Supply - 4 Reader	$693.78	$541.15	2	$1,082.30
Avigilon	AC-MER-CONT-LP1502	Intellegent Reader Controller - 2 Reader Module	$1,480.69	$1,154.94	4	$4,619.75
Avigilon	AC-MER-CON-MR52-S3B	Series 3B Two-Reader Interface Module	$856.18	$667.82	62	$41,404.86
Avigilon	AC-HID-READER-SIGNO-40NKS	Dual Tech Card Reader - Wall Plate Style	$302.03	$235.58	130	$30,625.84
	TOTAL EQUIPMENT COST					$1,041,148.91
	TECHNICAL INSTALLATION					
Visible Intellect	VI Technical Work	Design / Programming / Technical Commissioning/ Training	Camera/access	$165.00	1924	$317,460.00
Visible Intellect	VI Technical Work	Project Manager	Install	$165.00	160	$26,400.00
	TOTAL LABOR					$345,860.00
	SUPPORT PROGRAM AFTER FIRST YEAR			$69,350.45		
Visible Intellect						$0.00
	TOTAL LABOR AND EQUIPMENT					$1,387,008.91
Visible Intellect	Freight		Freight		1	$2,500.00
				Tax @	7.75%	$80,689.04
	PROJECT TOTAL COST					$1,470,197.95
	Taxes are only collected and paid in California. The owner is responsible for taxes in other states.					

Blue Violet Estimated Pricing (Installation estimate included-not final)

blueviolet NETWORKS

A DIVISION OF THE COOK & BOARDMAN GROUP, LLC

Quote

Date: 11/15/2022

Expiration Date: 12/15/2022

To:

Salesperson	Job Location or Description	Payment Terms
Melissa Orwig	Newport Mesa USD	NET 30

Scope of Work

Qty	Manufacturer	Part Number	Description	Unit Price	Qty Total
			Licenses & Servers		
30.00	AVIGILON	VMA-AS3-24P24-NA	HD Video Appliance Pro 24-Port 24TB, NA. ACC licenses sold	$ 9,266.14	$ 277,984.14
406.00	AVIGILON	ACC7-ENT	ACC 7 Enterprise Edition camera license	$ 240.19	$ 97,516.98
406.00	AVIGILON	ACC-ENT-SMART-1YR	ACC Enterprise Smart Plan, 1 year	$ 26.07	$ 10,582.47
30.00	AVIGILON	VMA-AS3-ANK	Analytics Kit for Appearance Search and Face Recognition, HDVA3 16/24-port	$ 939.01	$ 28,170.39
			Cameras		
346.00	AVIGILON	4.0C-H5A-DO1-IR	4.0 MP WDR, LightCatcher, Day/Night, Outdoor Dome, 3.3-9mm f/1.3 P-iris lens, Integrated IR, Next-Generation Analytics	$ 1,094.39	$ 378,658.68
60.00	AVIGILON	20C-H4A-4MH-360	4x 5MP H4 Multisensor Camera Module with 2.8mm Lens	$ 2,012.18	$ 120,730.60
60.00	Avigilon	H4AMH-AD-IRIL1	IR Illuminator Ring for H4 Multisensor	$ 316.19	$ 18,971.57
60.00	Avigilon	H4AMH-AD-PEND1	Pendant Mount Adapter for H4 Multisensor	$ 153.31	$ 9,198.34
60.00	Avigilon	H4AMH-DO-COVR1	Outdoor Dome Cover for H4 Multisensor	$ 153.31	$ 9,198.34
60.00	Avigilon	IRPTZ-MNT-WALL1	Wall Arm for H4 IRPTZ or H4 Multisensor	$ 91.03	$ 5,462.00
60.00	Avigilon	POE-INJ2-60W-NA	POE++ Injector; 60W; NA	$ 143.72	$ 8,623.44
			Access Control		
1.00	AVIGILON	AC-APP-128R-ENT2-6	Access Control Manager Enterprise 6 – Enterprise Appliance for 32 Readers	$ 8,419.06	$ 8,419.06
1.00	AVIGILON	AC-SW-LIC-16RCU-6-P	Access Control Manager 6 Sixteen Doors Expansion Software Licenses	$ 738.22	$ 738.22
1.00	AVIGILON	AC-SW-LIC-BDGE-6-P	Access Control Manager 6 Badging Software Licenses	$ 738.22	$ 738.22
1.00	Avigilon	AC-SW-LIC-LDAP-6-P	Access Control Manager 6 LDAP Directory Connectivity Software License	$ 2,239.90	$ 2,239.90
3.00	Avigilon	AC-SW-LIC-BOSCHINTR-10PANEL-6-P	Access Control Manager 6 Bosch Integration Software Licenses	$ 2,658.65	$ 7,975.95
4.00	Avigilon	AC-MER-CONT-LP1502	Intelligent Controller (Mercury Part #: LP1502	$ 1,202.32	$ 4,809.28
62.00	Avigilon	AC-MER-CON-MR52-S3B	Series 3B Two-Reader Interface Module (Mercury Part #: MR52-S3B)	$ 695.22	$ 43,103.53
2.00	Avigilon	AC-LSP-4DR-MER-LCK	Lifesafety Power Four Door Mercury Dual Voltage Integrated Power System	$ 563.35	$ 1,126.70
3.00	AVIGILON	AC-LSP-8DR-MER-LCK	Lifesafety Power Eight Door Mercury Dual Voltage Integrated Power System	$ 770.41	$ 2,311.23
7.00	Avigilon	AC-LSP-16DR-MER-LCK	Lifesafety Power Sixteen Door Mercury Dual Voltage Integrated Power System	$ 1,231.18	$ 8,618.25
130.00	Avigilon	AC-HID-READER-SIGNO-40NKS-T1000000	HID 40NKS-T1-000000	$ 245.25	$ 31,882.29
			Miscellaneous Hardware		
1.00	NSP	MISC	Conduit, Wiremolding, Cabling Support	$ 6,000.00	$ 6,000.00
135.00	NSP	P05623A4-B1-4NS	CAT6 550MHz 23/4 PR SOL Plenum CMP Yel 1000'	$ 344.50	$ 46,507.50
10.00	NSP	P1022B121884-S1-4	Access Control Cable Shielded, CMR, Yellow 1000ft	$ 1,141.00	$ 11,410.00
			Labor		

1544.00	SIN 246-1000	Security Technician II	Functional Responsibility: Assists in the design and performs the installation of security systems. Develops or reviews designs by analyzing engineering data and schematics. Receives initial instructions, equipment requirements, and advice from supervisor or engineer as needed.	$ 247,040.00	$ 247,040.00
160.00	SIN 246-1000	Project Manager	Functional Responsibility: coordination and completion of projects. Oversees all aspects of projects. Sets deadlines, assigns responsibilities, and monitors and summarizes progress of project.	$ 25,600.00	$ 25,600.00
160.00	SIN 246-1000	Senior Engineer	Functional Responsibility: Performs a wide range of highly technical duties associated with the design, implementation and support of Local Area Network and Wide Area Network environments and related services. This includes, but is not limited to assisting with the integration of security systems hardware and software into the physical and logical architecture of the enterprise's existing information technology topography.	$ 25,600.00	$ 25,600.00
				Subtotal	$ 1,083,059.56
				Sales Tax @ 7.75%	$ 83,937.12
				Installation	$ 298,240.00
				Shipping	$ 10,830.60
				Bond	$ -
				Total	**$ 1,476,067.27**

Netronix Estimated Pricing (Installation estimate included-not final)

NETRONIX INTEGRATION

Scope of Work:

Netronix Integrations will provide materials and services for the installation of a 406-camera Video Surveillance System (VSS) covering (30) district school sites of the Newport Mesa Unified School District (NMUSD) as described in the documentation provided for this project.

Related Documents

NMUSD REQUEST FOR PROPOSAL FOR INTEGRATED SECURITY STANDARDS, dated October 13, 2022 (21 pages)

Bill of Materials

Manufacturer	P/N	Description	Qty	Price	Amount
Avigilon	4.0C-H5A-DO1-IR	4.0MP WDR, Day/Night; Outdoor Dome; 3.3-9mm f/1.3 P-iris lens; Integrated IR	346	$ 1,078.22	$ 373,064.12
Avigilon	20C-H4A-4MH-360	4x 5 MP; WDR; LightCatcher; 2.8mm; Camera Only	60	$ 1,982.44	$ 118,946.40
Avigilon	ACC7-ENT	ACC 7 Enterprise camera channel	406	$ 253.22	$ 102,807.32
Avigilon	ACC-ENT-SMART-1YR	ACC Enterprise Smart Plan; 1 year	406	$ 25.68	$ 10,426.08
Avigilon	H4AMH-AD-PEND1	Outdoor pendant mount adapter	60	$ 151.04	$ 9,062.40
Avigilon	H4AMH-DO-COVR1	Outdoor Dome Cover for H4 Multisensor	60	$ 151.04	$ 9,062.40
Avigilon	IRPTZ-MNT-WALL1	Pendant w/Video mount adapter.	60	$ 89.70	$ 5,382.00
Avigilon	H4AMH-AD-IRIL1	Optional IR illuminator ring; up to 30m (100ft)	60	$ 311.52	$ 18,691.20
Avigilon	VMA-AS3-ANK	Analytics Kit for Appearance Search and Face Recognition; HDVA3 16/24-port	30	$ 925.15	$ 27,754.50
Avigilon	POE-INJ2-60W-NA	Indoor single port Gigabit PoE++ 60W; N. A. power cord included.	60	$ 141.60	$ 8,496.00

Avigilon	VMA-AS3-24 P24-NA	HD Video Appliance Pro 24-Port 24TB; NA. ACC licenses sold separately	30	$ 9,129.20	$ 273,876.00
Netronix		VSS Device Consumables; screws, labels, connectors, etc.	1	$ 8,920.00	$ 8,920.00
Windy City Wire	556600	Cable, CAT 6, 23/4P, CMP, WHT, RIB, IMP, White	80	$ 425.83	$ 34,066.40
ICC	IC107SB1GY	1PRT SRFC MNT BOX GREY	406	$ 2.40	$ 974.40
ICC	IC107BP241	BLANK HD P-PANEL 24-PORT	30	$ 22.65	$ 679.50
ICC	IC1078F6YL	CAT6 MODULR JCK HI DENS YELLW	812	$ 4.60	$ 3,735.20
Netronix		Cable Consumables: screws, hangers, clamps, j-hooks, etc.	1	$ 8,670.00	$ 8,670.00
Axis Communications	5801-641	AXIS T8061 ETHERNET SURGE PROTECTOR	60	$ 104.99	$ 6,299.40
W BOX TECH	C6BL36	3FT CAT6 PATCH CABLE BLUE 6PK	73	$ 13.72	$ 1,001.56
W BOX TECH	C6BL16	1FT CAT 6 PATCH CABLE BLUE 6PK	83	$ 10.97	$ 910.51

The attached Schedule of Equipment, if any, defines and limits the equipment to be furnished as part of this Agreement. If any additional materials or equipment are needed, then there will be additional charges.

Pricing

Materials Total	$1,022,825.39
Shipping and Handling	$40,913.02
Labor	$641,130.40
Sales Tax	$71,076.10
TOTAL	**$1,775,944.91**

Please note that this pricing includes estimated taxes for California. Tax rates may change, and you will be responsible for the then-current tax rate at the time of invoicing. If you are tax-exempt, please provide your tax-exempt certificate or applicable taxes will be charged.

Safety Reimagined Ecosystem

REIMAGINE HOW SAFETY IS DELIVERED

MAXIMIZE YOUR SECURITY INVESTMENTS WITH AN INTEGRATED ECOSYSTEM

Schools depend on an increasingly diverse set of tools and technology to stay safe and get the job done – effectively detecting and analyzing events, communicating, responding to and reporting any security or operational threats. However, outdated and siloed systems and processes in place today can negatively impact efficiency and productivity, and most importantly, risk the safety and security of students, staff and property. An integrated technology ecosystem reduces inefficiencies, streamlines operations and delivers improved security for your school and community.

POWERFUL ALONE, GAME CHANGING TOGETHER

Motorola Solutions has reimagined how safety is delivered by developing the first and only solution that unifies voice, video, data and analytics in a single platform. With one integrated technology ecosystem supported by a single, trusted solution provider, your organization can achieve the foundation of safety that everything else is built on while also reducing costs, stress and risk. Safety Reimagined is a unified solution that enables your school and community to work together in more powerful ways.

The same technology that keeps your team and facility safe also makes you better at everything you do. Safety Reimagined integrates the fundamental technologies to keep your facility connected and operations efficient – providing the assurance of safety you need to deliver on your missions and objectives.

SAFETY #1 PRIORITY

Safety for school staff, students and visitors ranked as top priority.*

*Motorola Solutions 2021 Education Survey

MOTOROLA SOLUTIONS

FOCUS ON WHAT MATTERS MOST. AUTOMATE THE REST.

Your time is precious and managing the communications, video and software that comprise your security technology ecosystem can be a time-consuming, challenging task. With Orchestrate, you can automate your workflows, manage operations, configure your technology and control your security ecosystem. For example, your security team can utilize Orchestrate to create "if-this-then-that" workflows that automatically send notifications from situational awareness tools instantly to appropriate staff, directly on their communication devices. Orchestrate combines artificial intelligence with digital logic to help configure how you detect, analyze, communicate and respond to events.

Orchestrate

> "Being able to communicate is absolutely crucial not only before and during, but after an event. We've got to be able to talk, communicate, review video, to know where people are in the building."

Lieutenant Chris Wright
Perry Township School Police

ADDRESSING POTENTIAL SECURITY THREATS

PROACTIVE PERIMETER MONITORING

PROPPED DOOR

ACCESS CONTROL

DETECT Proactively monitor operational areas

ANALYZE Recognize and accurately evaluate situations as they arise

COMMUNICATE Connect workgroups that need to collaborate

RESPOND Quickly respond to and document issues

These potential security threats are just a few of many examples that utilize the integrated technology ecosystem to provide situational awareness, identify potential risks, communicate with crucial parties and potentially disarm the situation before it escalates. Orchestrate connects every step of threat management with its automated workflow design.

EXPAND CAPABILITIES. MAXIMIZE INVESTMENTS.

Because the ecosystem is modular and customizable, you can choose the solutions that best suit your needs and add to it when the time is right for your school – while maximizing the value of your existing investments. With Safety Reimagined, you can manage your security operations from a single platform, use artificial intelligence to automate appropriate workflows and empower your team to make better, more informed decisions.

REIMAGINING SAFETY

Cities, schools and communities are safer when technology and people work together. Motorola Solutions' ecosystem helps secure your students and staff, protect their property and streamline operations. By integrating technology, teams can work safer and faster, from response to resolution, with less susceptibility to disruptions and threats. With this foundation of safety in place, your school community can thrive. Your teachers and staff can feel more comfortable in the workplace, resources are better allocated and efficiencies are realized throughout all operations.

To learn more about Safety Reimagined, visit:
motorolasolutions.com/safetyreimagined

MOTOROLA SOLUTIONS

Motorola Solutions, Inc. 500 West Monroe Street, Chicago, IL 60661 U.S.A. **motorolasolutions.com**

MOTOROLA, MOTO, MOTOROLA SOLUTIONS and the Stylized M Logo are trademarks or registered trademarks of Motorola Trademark Holdings, LLC and are used under license. All other trademarks are the property of their respective owners. © 2021 Motorola Solutions, Inc. All rights reserved. 10-2021 [CX02]